FULL THROTTLE 2G USA

Model Year 2024



SCRAMBLER

Chassis prefix:
Cylinder capacity:

D36000024
SPARE PARTS CATALOGUE
en-US

The present spare parts order exactly the right spare parts.

When ordering specify:

1. the part's code number followed by its description and quantity needed;
2. the motorcycle's serial number, stamped on the steering head.

Reference to right and left apply to the vehicle in terms of its direction of move-ment.

Spare parts drawings are general and do not represent the part.

The contents of this catalogue are general and can undergo changes without prior notice.

CHARACTERISTICS LEGENDA

CHARACTERISTIC CODE	CHARACTERISTIC DESCRIPTION	VALUE CODE	VALUE DESCRIPTION
CPT	PART CAR	STD	MOTO STANDARD
DFR	DFR	N	NO
MOD	MODEL	SC800FT	Full Throttle
PLT	PLANT	DB10	DMH
XCO	MAIN CLR	GPNMB	ROSSO GP 19 / DARK STEALTH
XCR	FR/W COL	CBB	CARB. BLACK FRAME,BLACK WHEELS
XST	STD CNTY	CAL	VERSIONE CALIFORNIA
XST	STD CNTY	CDN	VERSIONE CANADA

COLOUR	COLOUR CODE	COLOUR DESCRIPTION	FINISHED PRODUCTS
	GPNMB	ROSSO GP 19 / DARK STEALTH	(D36004424) SC800FT 24 CAL GPNMB CBB STD DMH (D36004524) SC800FT 24 CDN GPNMB CBB STD DMH

General information....3
Colours....4
Group ELECTRIC....8
Drawing 13A - WIRING HARNESS (COIL)....8
Drawing 13B - VEHICLE ELECTRIC SYSTEM....10
Drawing 13C - BATTERY HOLDER....12
Drawing 13D - ELECTRICAL DEVICES....16
Drawing 13E - ELECTRICAL DEVICES....18
Drawing 14A - HEADLIGHT....20
Drawing 14B - TAILLIGHT....22
Drawing 15A - INSTRUMENT PANEL....24
Group OIL....26
Drawing L - SHELL ADVANCE....26
Group ENGINE....28
Drawing 02A - SHIFT CAM - FORK....28
Drawing 03A - GEAR BOX....30
Drawing 03B - CLUTCH (FCC)....32
Drawing 04A - CLUTCH COVER....34
Drawing 04B - GENERATOR COVER....36
Drawing 05A - CONNECTING RODS....38
Drawing 06A - CYLINDERS - PISTONS....40
Drawing 07A - TIMING SYSTEM....42
Drawing 08A - OIL PUMP....44
Drawing 09A - HALF-CRANKCASES PAIR....46
Drawing 09B - HALF-CRANKCASES PAIR....50
Drawing 10A - ELECTRIC STARTING AND IGNITION....52
Drawing 11A - VERTICAL CYLINDER HEAD - TIMING....54
Drawing 11B - HORIZONTAL HEAD – TIMING SYSTEM....56
Drawing 11C - VERTICAL HEAD....58

Drawing 11D - HORIZONTAL HEAD 66
Drawing 11E - INTAKE MANIFOLD 74
Group TOOLS 76
Drawing 01A - DDS TESTER 76
Drawing 01B - WORKSHOP SERVICE TOOLS, ENGINE 78
Drawing 01C - WORKSHOP SERVICE TOOLS, FRAME 80
Group TYRES 82
Drawing A3 - TYRES 82
Drawing B3 - (*) PIRELLI SCORPION™ RALLY STR 84
Drawing C3 - PIRELLI SCORPION™ TRAIL II 86
Drawing D2 - PIRELLI SCORPION™ RALLY 88
Drawing H - PIRELLI ANGEL™ GT II 90
Group FRAME 92
Drawing 16A - STAND 92
Drawing 17A - FRONT SPROCKET - CHAIN 94
Drawing 18A - STEERING ASSEMBLY 96
Drawing 18B - FRONT FORK 98
Drawing 19A - REAR SWINGING ARM 100
Drawing 20A - FRONT BRAKE PUMP 102
Drawing 20B - FRONT BRAKE SYSTEM 104
Drawing 20C - BRAKING SYSTEM ABS 106
Drawing 20D - REAR BRAKE SYSTEM 108
Drawing 21A - PLATE HOLDER 110
Drawing 22A - HANDLEBAR 112
Drawing 22B - CLUTCH CONTROL 114
Drawing 23A - REAR SHOCK ABSORBER 116
Drawing 24A - FRONT MUDGUARD 118
Drawing 26A - FOOTRESTS, LEFT 120
Drawing 26B - FOOTRESTS, RIGHT 122
Drawing 28A - FRONT WHEEL 124

Drawing 29A - REAR WHEEL..... 126
Drawing 30A - TANK..... 128
Drawing 30B - FUEL PUMP..... 130
Drawing 31A - EXHAUSRT PIPE ASSY..... 132
Drawing 31B - EXHAUST SILENCER..... 134
Drawing 32A - SEAT..... 136
Drawing 33A - FRAME..... 138
Drawing 34A - OIL COOLER..... 140
Drawing 35A - AIR INTAKE - OIL BREATHER..... 142
Drawing 35B - SECONDARY AIR SYSTEM..... 144
Drawing 36A - THROTTLE BODY..... 146
Drawing 36B - CANISTER FILTER..... 148
Drawing 37A - FAIRING..... 150
Drawing 37B - FAIRING..... 152
Drawing 37C - GUARD, ENGINE..... 154
Drawing 38A - POSITIONING PLATES..... 156
Alphanumeric index..... 158

IMP01574

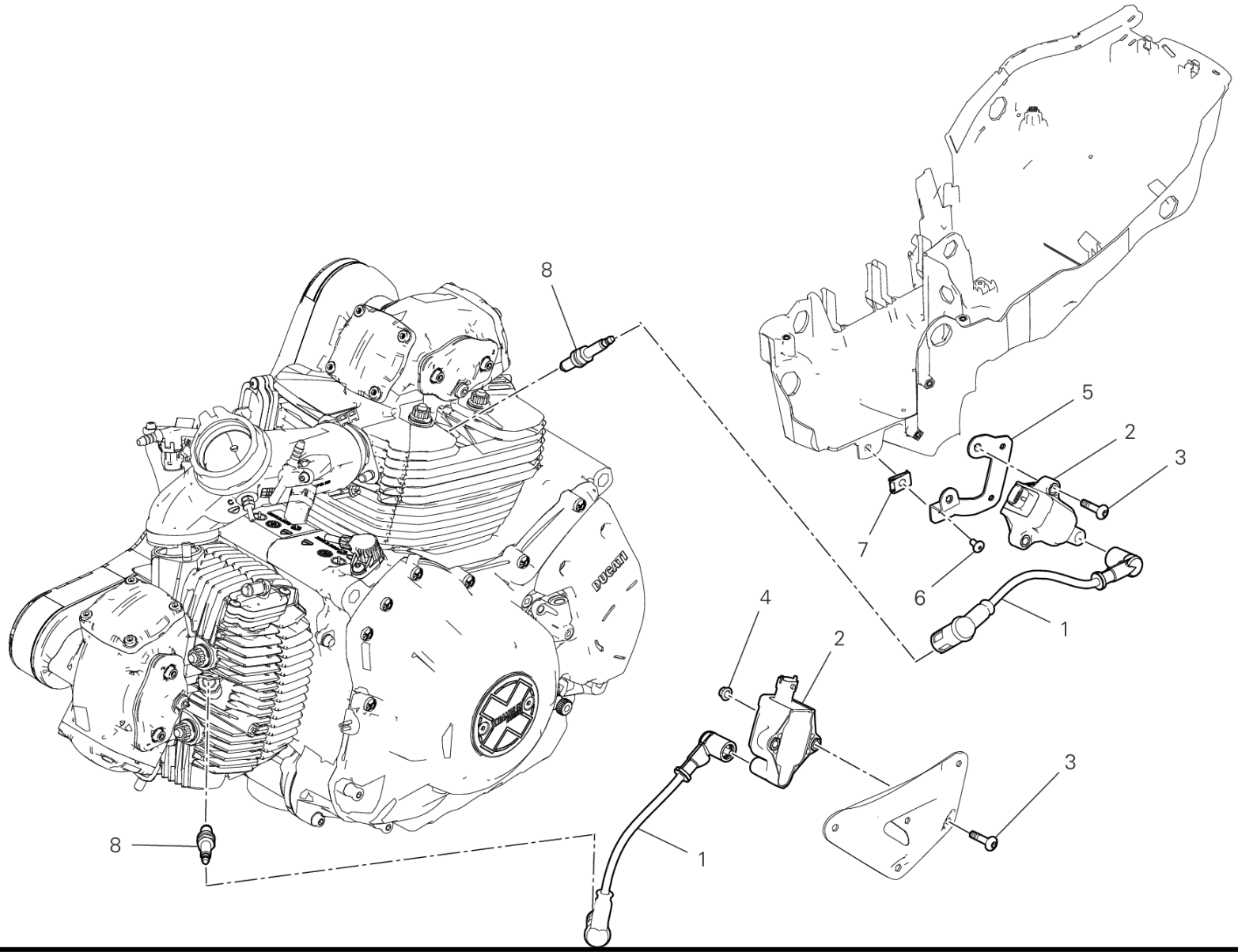

DRAWING 13A - WIRING HARNESS (COIL)

GROUP ELECTRIC

POS.	CODE	DESCRIPTION	QTY	VALIDITY	NOTES
1	67110661C	CABLE, VERTICAL HEAD SPARK PLUG LH	2		
2	38040221B	IGNITION COIL ASSY	2		
3	77244373B	SCREW	4		
4	74810361A	NUT	2		
5	8301M791AA	BRACKET, COIL	1		
6	77244163B	SCREW TBEI M5X10	3		
7	85044691A	QUICK FASTENING	1		
8	67040351A	SPARK PLUG	2		

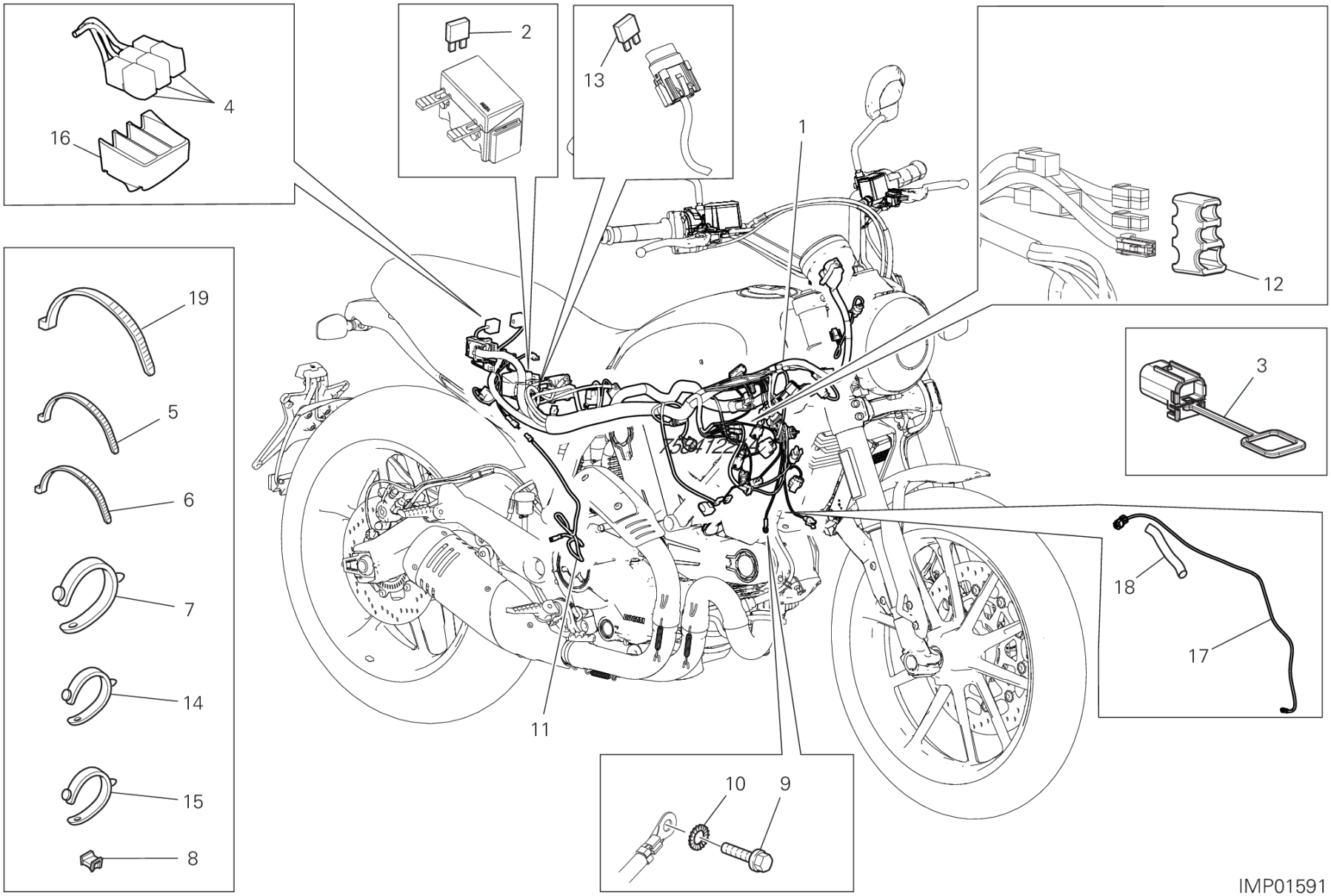
4
16
2
13
1
12
3
19
5
6
7
14
15
8
18
17
11
10
9
IMP01591

POS.	CODE	DESCRIPTION	QTY	VALIDITY	NOTES
1	5101M511D	MAIN WIRING HARNESS	1		
2	38940191A	FUSE 5A	3		
	38940201A	FUSE 10A	2		
	38940211A	FUSE 15A	2		
	38940221A	FUSE 20A	2		
3	87211681A	CAP DDA	1		
4	54140191A	RELAY	3		
5	069191030	CLAMP	16		
6	74140381A	CLAMP	16		
7	74110131A	CLAMP, RUBBER 82MM	1		
8	85040671A	CLAMP TUCKER	14		
9	77211061A	SCREW TEF M6X14	1		
10	85550001B	SPRING WASHER	1		
11	5101E251B	REAR WIRING	1		
12	86612091A	BRACKET, CONNECTOR	1		
13	38940351A	FUSE 50A	1		
14	74110121A	CLAMP, RUBBER 62MM	7		
15	74110551A	CLAMP, RUBBER 39MM	3		
16	86613701B	RUBBER PAD	1		
17	5101N031A	WIRING	1		
18	4601F521A	SHEATH	1		
19	75841221A	CLAMP	2		

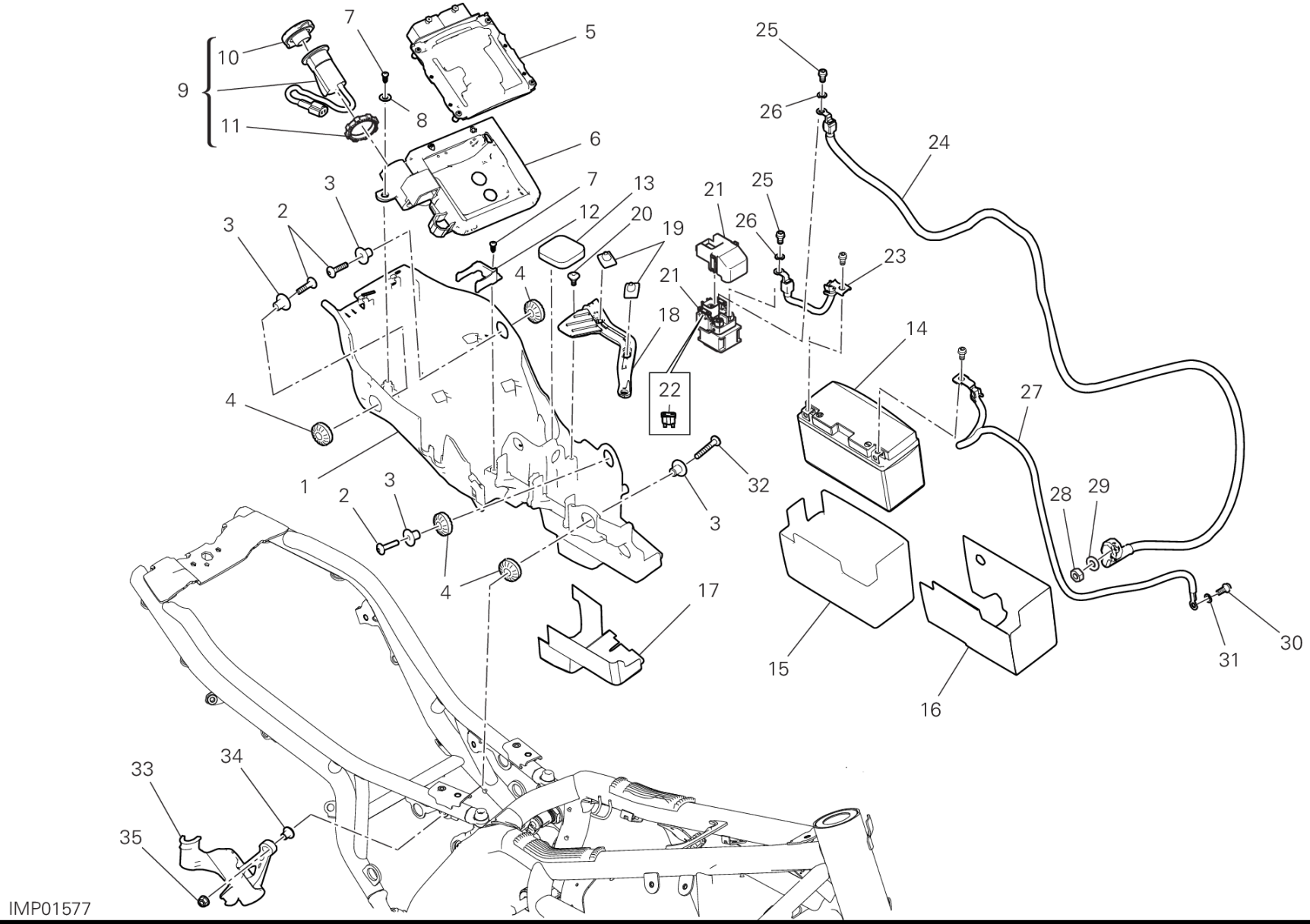
IMP01577

DRAWING 13C - BATTERY HOLDER

GROUP ELECTRIC

POS.	CODE	DESCRIPTION	QTY	VALIDITY	NOTES
1	8291P691C	BOX, BATTERY	1		
2	77210971B	SCREW	3		
3	71610061A	SPACER	4		
4	76411361A	VIBRATION DAMPER PAD	4		
5	28643791A	ENGINE CONTROL UNIT	1		
	28643791C	ENGINE CONTROL UNIT	1		
6	86613691A		1		
7	77440071A	SCREW, TAPPING M4.5X12	2		
8	85240171A	WASHER	1		
9	38640561C	SOCKET, LOW VOLTAGE	1		
10	87211081A	CAP DDA	1		
11	75040211A	NUT	1		
12	8291H231AA	BRACKET, STARTER RELAY	1		
13	86611861A	PAD	1		
14	69926761A	BATTERY	1		
15	86613791A	BATTERY HOLDER	1		
16	4601P061A		3		
17	4601N901B		1		
18	8301M801A		1		
19	86610301B	RUBBER PAD	2		
20	77214411BA	SCREW, SPECIAL	2		
21	39740081B	STARTER RELAY	1		
22	38940231A	FUSE 30A	1		
23	51411201A	WIRE, BATTERY PLUS LEAD	1		
24	51411211C	SOLENOID STARTER - STARTER MOTOR CABLE	1		
25	77156628B	SCREW TCEIF M6X10	2		
26	85350101A	WASHER, SPRING	2		
27	51311011C	WIRE, BATTERY MINUS	1		
28	75050051A	NUT 6MM	1		
29	85350091A	WASHER, SPRING	1		
30	77211061A	SCREW TEF M6X14	1		
31	85550001B	SPRING WASHER	1		
32	77240508C	SCREW	1		
33	75812141A		6		
34	71614261A	SPACER	1		

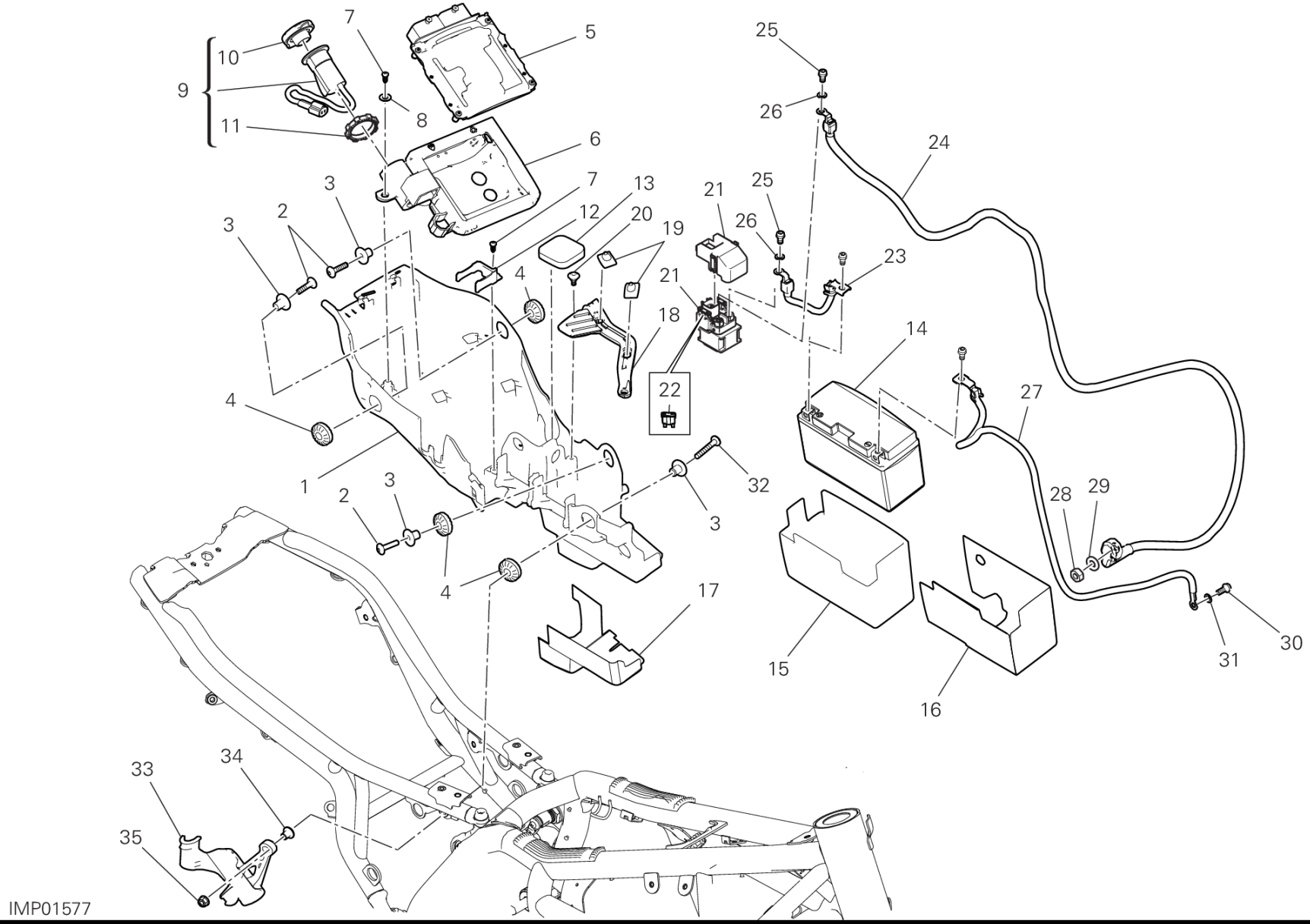
IMP01577

POS.	CODE	DESCRIPTION	QTY	VALIDITY	NOTES
35	74941118B	NUT 6MM	1		

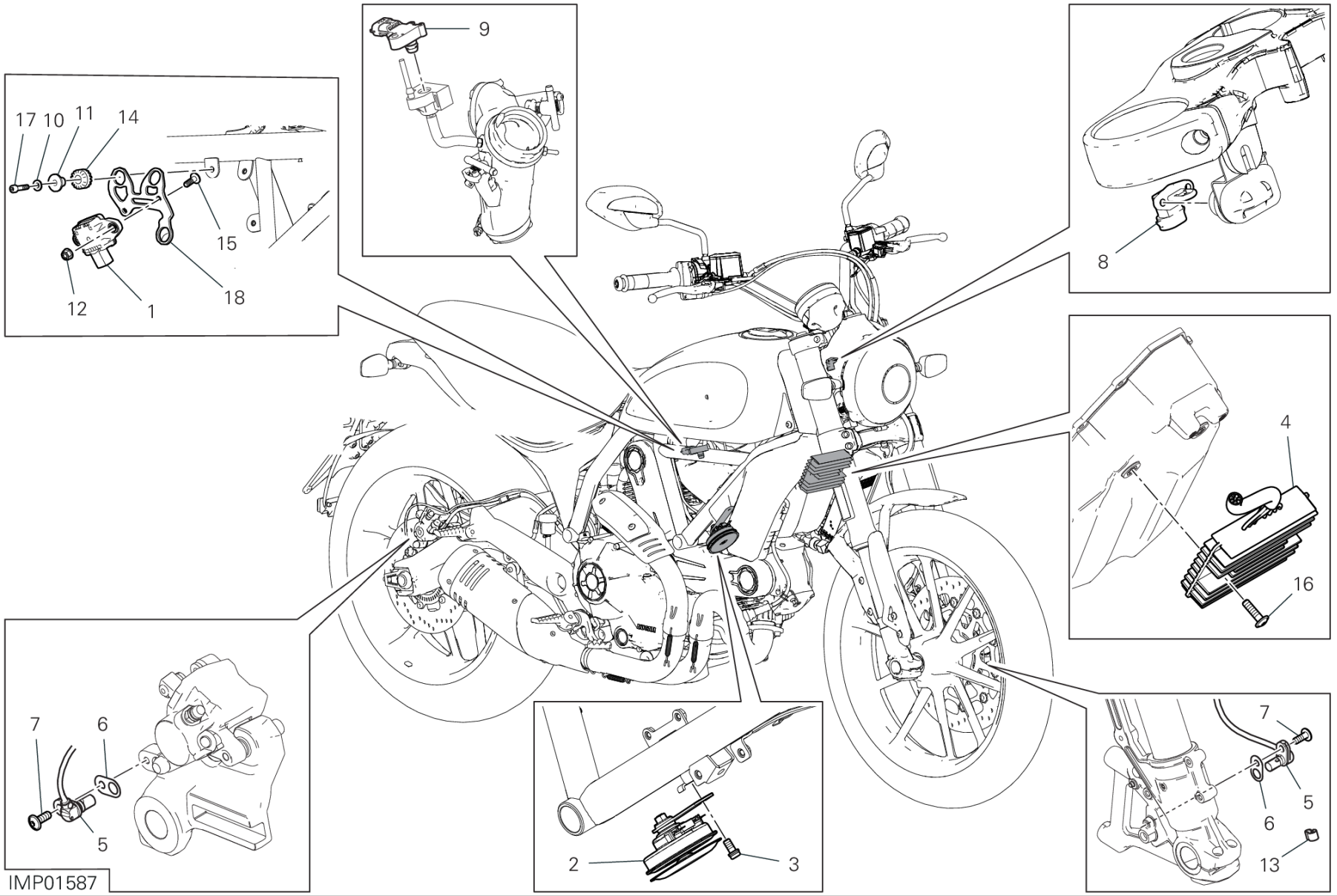
17 10 11 14
15
12 1 18
9
8
4
16
7 6
5
IMP01587
2 3
7
5
6
13

POS.	CODE	DESCRIPTION	QTY	VALIDITY	NOTES
1	38540073B	PIATTAFORMA INERZIALE	1		
2	51610053D	HORN	1		
3	77211021A	SCREW TBEIF M6X10	1		
4	54040111C	VOLTAGE REGULATOR	1		
5	55219421B	SENSOR, SPEED	2		
6	71314901A	GASKET TH.02	4		
	71319201A	GASKET 0.5 MM	3		
7	77210423C	SCREW TBEIF M6X16	2		
8	55240121A	SENSOR, AIR TEMPERATURE	1		
9	55243161B	SENSOR, PRESSURE	1		
10	85213081A	WASHER	3		
11	71610031A	SPACER	3		
12	74941118B	NUT 6MM	2		
13	75840601A	FAIRLEAD	12		
14	76410241A	VIBRATION DAMPER PAD	3		
15	77240433C	SCREW	2		
16	77240453C	SCREW TBEIF M6X22 10.9	2		
17	77150443B	SCREW TCEI M5X22 UNI5931 8.8	3		
18	8301M681AA	BRACKET	1		

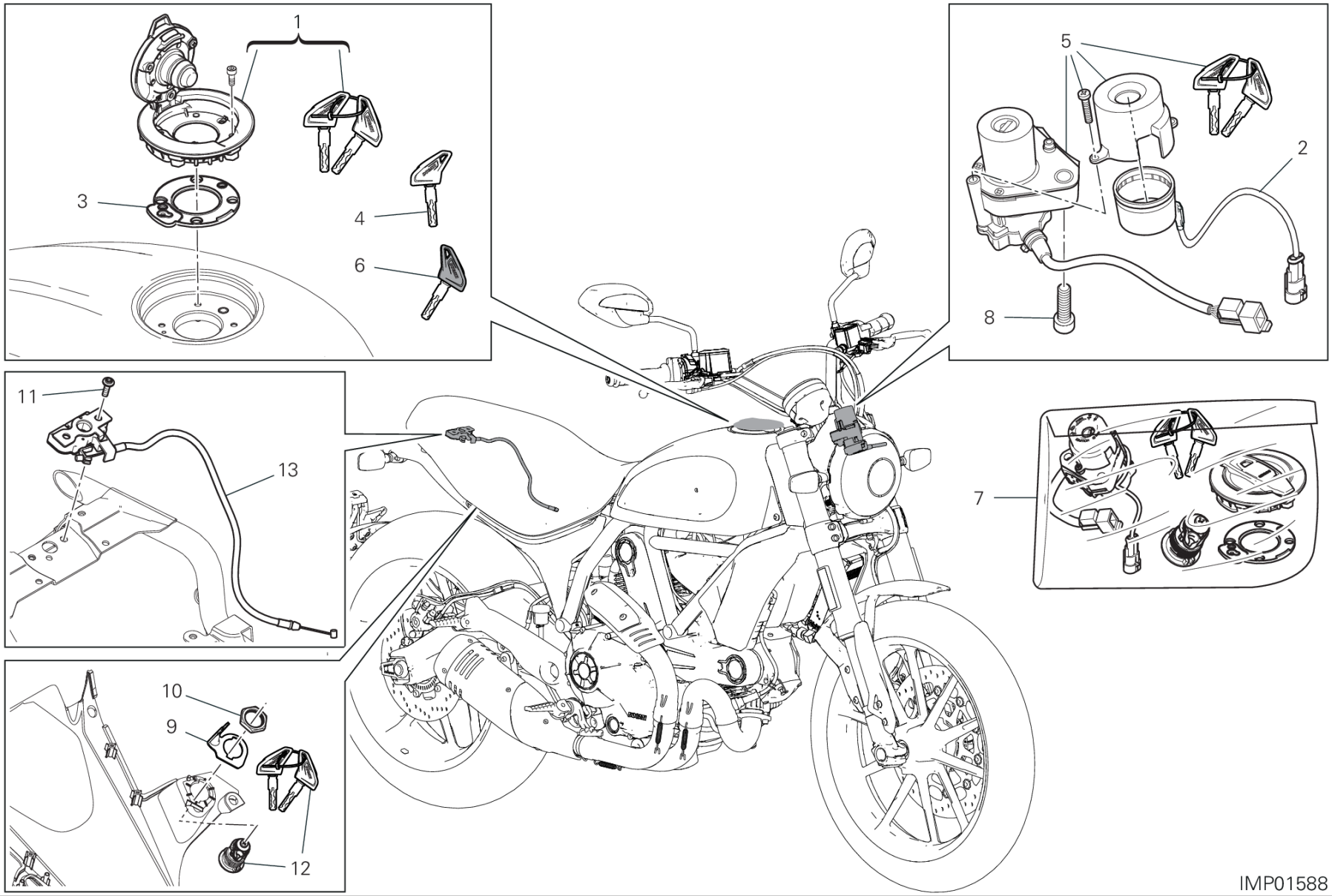
1
3
4
6
5
2
8
11
13
7
10
9
12
IMP01588

POS.	CODE	DESCRIPTION	QTY	VALIDITY	NOTES
1	89520481C	TANK CAP COMPLETE	1		
2	51840051B	COIL ANTENNA, IMMOBILIZER	1		
3	86640111A	GASKET, FUEL TANK CAP	1		
4	59840291A	KEY, NON INDENTED WITHOUT TRANSPONDER	1		
5	65220391B	KEY-OPERATED SWITCH	1		
6	59810201A	KEY WITH TRANSPONDER	2		
7	59822641C	LOCKS KIT	1		
8	77151278B	SCREW TCEI M8X30	2		
9	82716141A	PLATE	1		
10	75011551A	NUT M22X1.5	1		
11	77240308C	SCREW	2		
12	59820611A		1		
13	59840611A	LOCK LATCH	1		

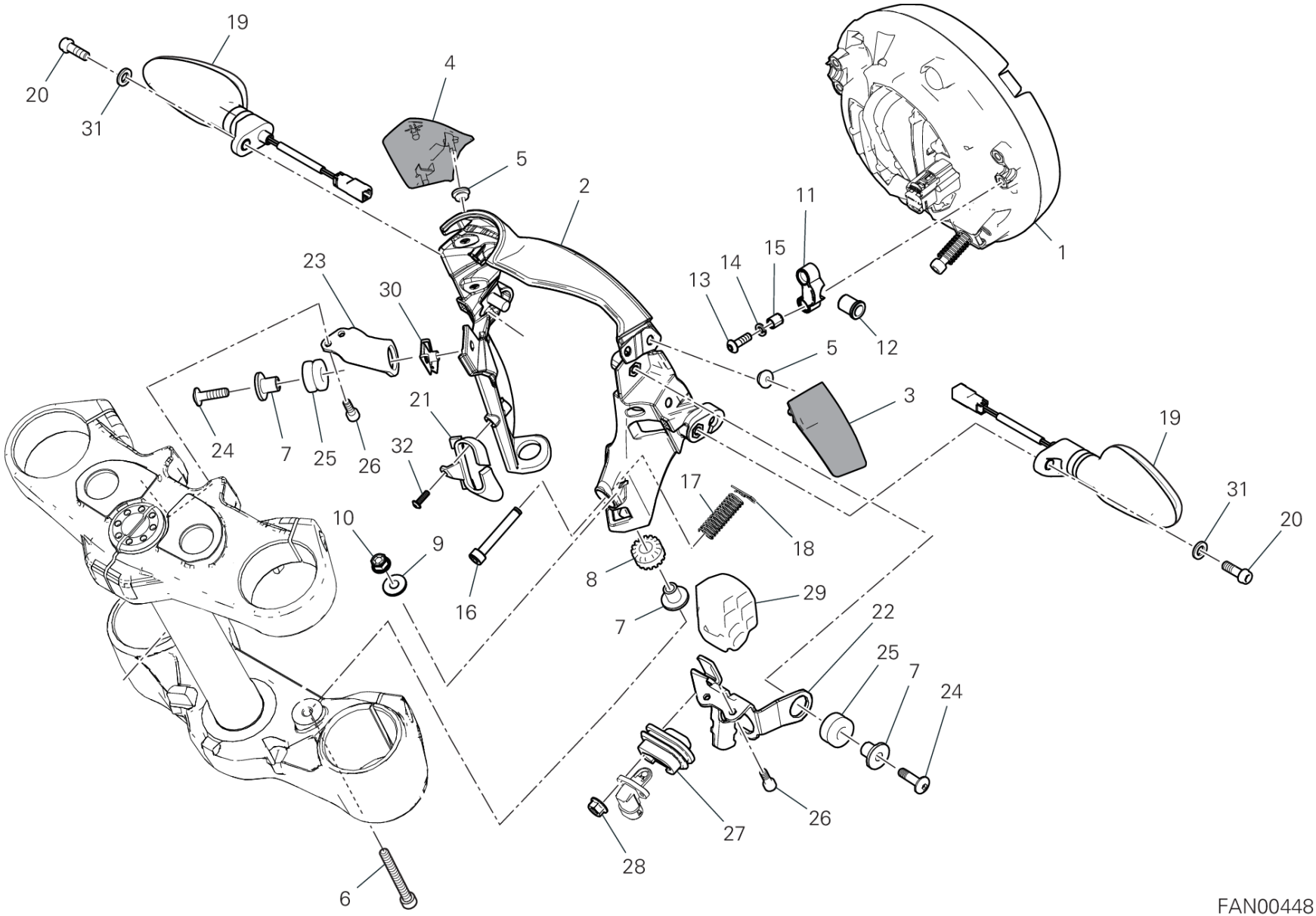
19
20
31
4
5
2
11
15
14
13
1
23
30
12
5
3
21
24
7
25
26
32
19
31
20
17
18
10
9
16
8
7
29
22
25
7
24
26
27
28
6
FAN00448

DRAWING 14A - HEADLIGHT

GROUP ELECTRIC

POS.	CODE	DESCRIPTION	QTY	VALIDITY	NOTES
1	52010611C	HEADLIGHT	1		
2	8291P611B		1		
3	4601N171AD		1		
4	4601N181AD		1		
5	76417651A	RUBBER PAD	1		
6	77150768B	SCREW TCEI M6X55	2		
7	7131A792A	BUSH	2		
8	76414211A	VIBRATION DAMPER PAD	2		
9	85250091A	WASHER 6.4X18X1	2		
10	74940041A	NUT, SELF-LOCKING M6	2		
11	8291E041A	U-BOLT KIT	2		
12	71011901A	SPINDLE, TAPER	2		
13	77510171A	SCREW TBEI M5X16	4		
14	85340021A	SPRING WASHER	4		
15	71115491A	SPACER	4		
16	77941952A	SCREW, HEADLIGHT ADJUSTING	1		
17	79940201A	SPRING	1		
18	68540081A	COTTER PIN	1		
19	53010611B	TURN INDICATORS	2		
20	77110401B	SCREW	2		
21	75812301A	HOSE GUIDE ABS	1		
22	8301N851AA	RIGHT BRACKET	1		
23	8301M821AA	LEFT BRACKET	1		
24	77240453C	SCREW TBEIF M6X22 10.9	2		
25	76410641A	VIBRATION DAMPER PAD	2		
26	77150408B	SCREW TCEI M5X14	4		
27	76410971A	RUBBER PAD	1		
28	74841101AA	NUT 6MM	2		
29	86613711A	BRACKET, CONNECTOR	1		
30	85040381A	QUICK FASTENING	1		
31	85212641A	WASHER 6.4X12.5X1.6	2		
32	77440111A	SCREW	1		

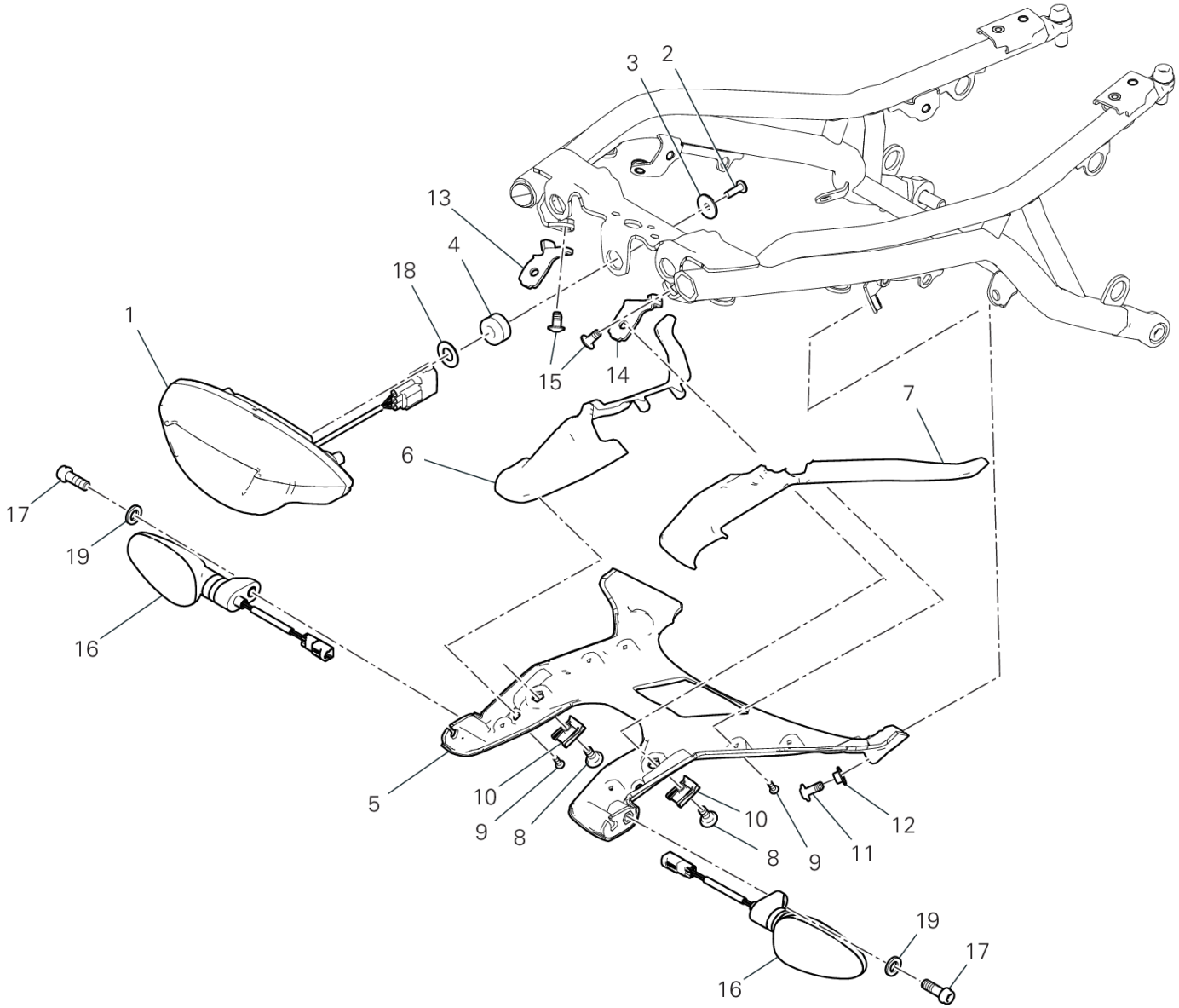

FAN00438

DRAWING 14B - TAILLIGHT

GROUP ELECTRIC

POS.	CODE	DESCRIPTION	QTY	VALIDITY	NOTES
1	52510761C	TAILLIGHT	1		
2	77440041A	SCREW, TAPPING M5X16	3		
3	85241711A	WASHER	3		
4	76410901A	RUBBER PAD	3		
5	8291R181A	LOWER HOLDER	2		
6	8291R171B	BRACKET UPPER	2		
7	8291R341B	BRACKET UPPER	2		
8	77211221B	SCREW, SPECIAL	2		
9	77440101A	SCREW, TAPPING 3.5X10	6		
10	85040381A	QUICK FASTENING	2		
11	77210893B	SCREW	2		
12	71614891AA	SPACER	1		
13	8301N441AA	LEFT BRACKET	1		
14	8301N431AA	RIGHT BRACKET	1		
15	77240403CA	SCREW M6X12	2		
16	53010611B	TURN INDICATORS	2		
17	77156643B	SCREW TCEIF M6X14 8.8	1		
18	85210541B	WASHER 10.2X20X1	3		
19	85212641A	WASHER 6.4X12.5X1.6	2		

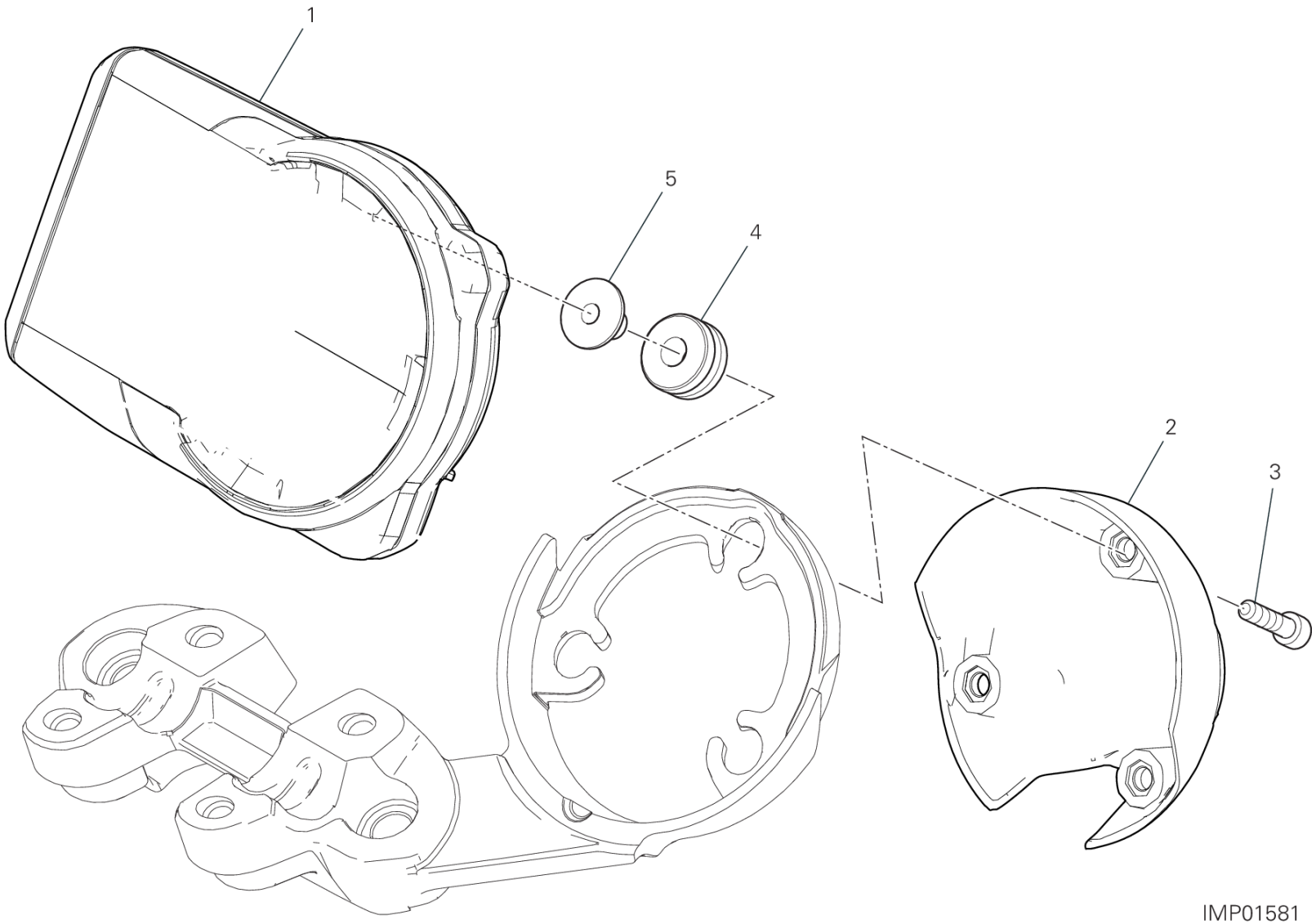
1
5
4
2
3
IMP01581

DRAWING 15A - INSTRUMENT PANEL

GROUP ELECTRIC

POS.	CODE	DESCRIPTION	QTY	VALIDITY	NOTES
1	40612015A	INSTRUMENT PANEL	1		
2	4601M842A	COVER, METER	1		
3	77150443B	SCREW TCEI M5X22 UNI5931 8.8	3		
4	76411141A	VIBRATION DAMPER PAD	3		
5	71615151AA	SPACER	3		


DUCATI
MOTORCYCLE OIL
Specially developed with Ducati
Shell
ADVANCE
DUCATI 15W-50
BASED ON SYNTHETIC TECHNOLOGY
4T
1L

POS.	CODE	DESCRIPTION	QTY	VALIDITY	NOTES
1	944650035	SHELL ADVANCE DUCATI 15W50 - 1L BOTTLE	1		
2	944650037	SHELL ADVANCE DUCATI 15W50 – 209L DRUM	1		

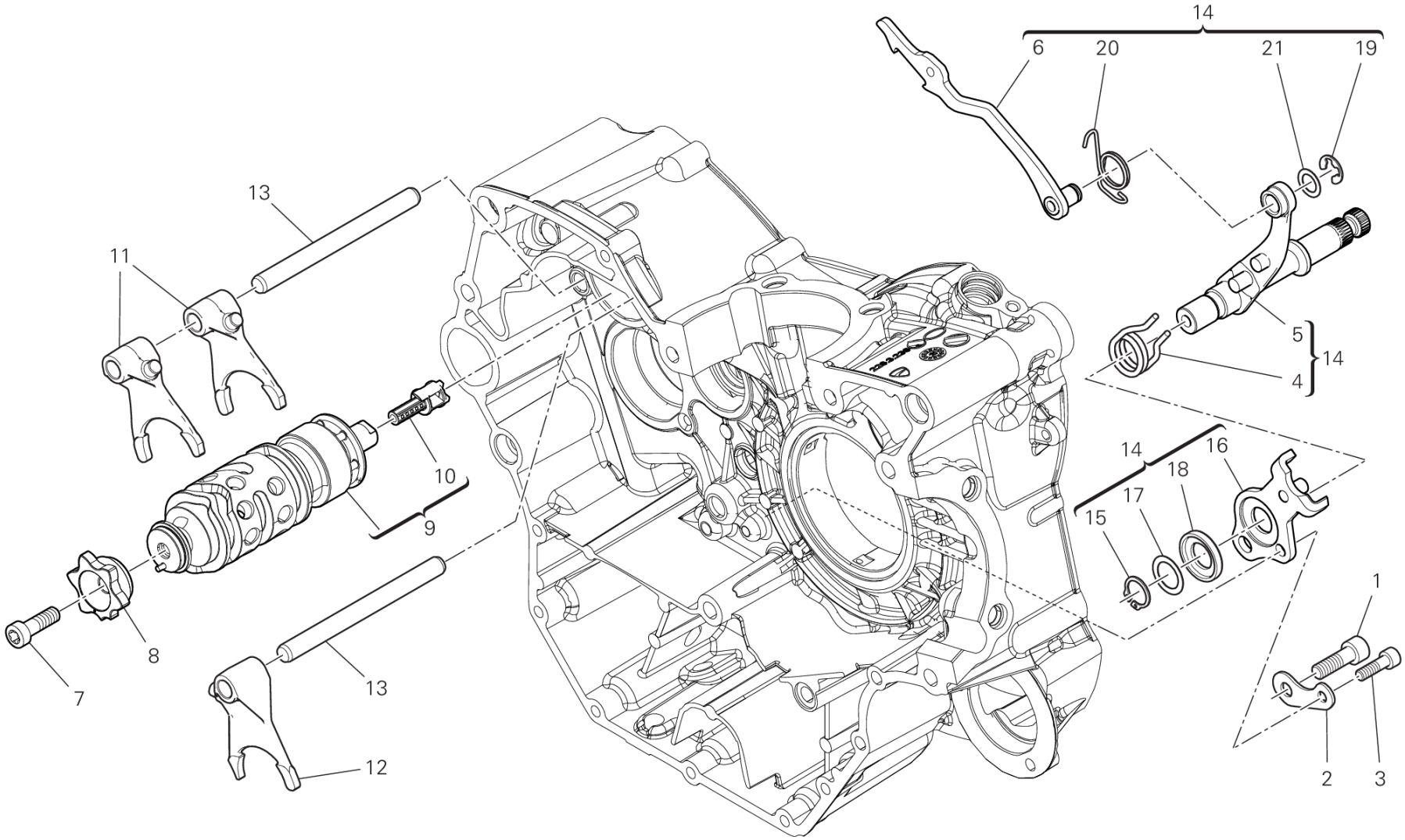

CMB00593

DRAWING 02A - SHIFT CAM - FORK

GROUP ENGINE

POS.	CODE	DESCRIPTION	QTY	VALIDITY	NOTES
1	77151250ZF	SCREW	1		
2	71319151A	SPACER	1		
3	77150670ZF	SCREW	1		
4	79915061A	SPRING, SHIFT RETURN	1		
5	82114731A	GEAR SELECTOR SHAFT	1		
6	18020511A	CONTROL FORK	1		
7	71950538C	SCREW	1		
8	18210781A	FLANGE	1		
9	18220772A	COMPLETE GEARBOX DRUM	1		
10	55243911A	MAGNETE	1		
11	180Z0011A	1ST, 4TH-2ND, 3RD GEAR SELECTOR FORK	2		
12	180Z0021A	5TH,6TH GEAR SELECTOR FORK	1		
13	82113881A	FORK PIN	2		
14	82120151A	CONTROL FORK	1		
15	735001542	CIRCLIP 15 DIN 471	1		
16	82610261A	STOPPER PLATE	1		
17	040029126	THRUST WASHER 15.5X22X0.5	1		
18	88110121A	CENTERING RING	1		
19	88450341B	SPRING RING	1		
20	79912961A	RETURN SPRING	1		
21	040009050	THRUST WASHER 10.5X16X0.5	1		

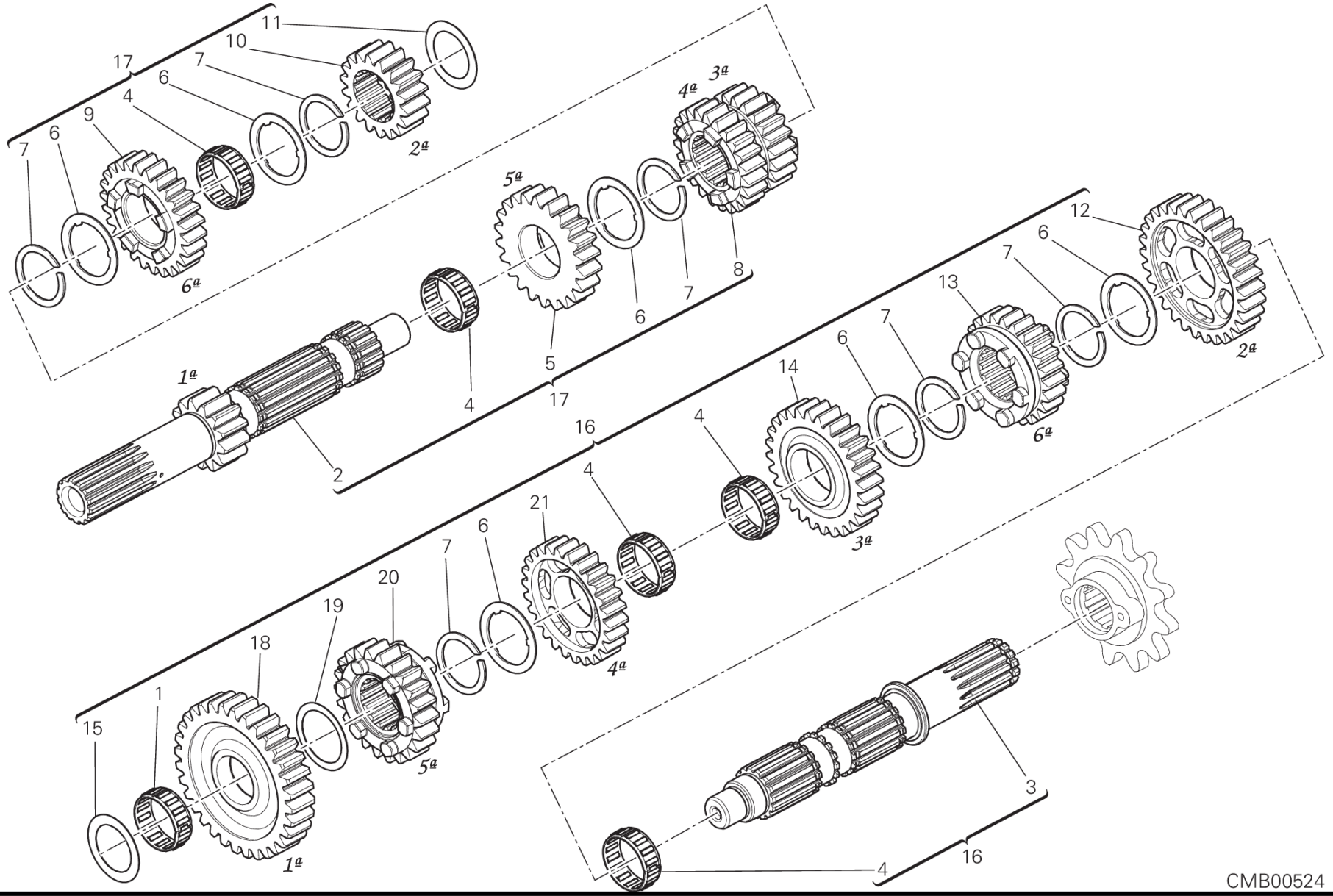
11
10
17
7
6
4
9
7
6
2ª
4ª
3ª
5ª
6ª
8
7
6
5
1ª
4
17
2
16
4
14
6
7
13
7
6
12
2ª
6ª
3ª
4
21
6
7
20
19
18
1
15
5ª
1ª
4ª
3
4
16
CMB00524

DRAWING 03A - GEAR BOX

GROUP ENGINE

POS.	CODE	DESCRIPTION	QTY	VALIDITY	NOTES
1	70140211A	BEARING, NEEDLE	1		
2	14911071A	GEARBOX MAIN SHAFT	1		
3	14911061C	DRIVEN SHAFT	1		
4	70140053A	NEEDLE CAGE	5		
5	17213381B	DRIVING GEAR 5TH SPEED	1		
6	85611261A	THRUST WASHER 0.5 MM	6		
7	88210141A	SPRING RING	6		
8	17213371B	GEAR, 3RD PINION 21/23T	1		
9	17213391B	GEAR DRIVE 6TH SPEED	1		
10	17212581A	DRIVING GEAR 2ND	1		
11	71310141E	THRUST WASHER 20.3X32X1.6	1		
12	17214521A	DRIVEN GEAR 2ND SPEED	1		
13	17214511A	DRIVEN GEAR 6TH SPEED	1		
14	17214501A	DRIVEN GEAR 3RD SPEED	1		
15	71312661A	THRUST WASHER 17.3X31X3.15	1		
16	15021781C	COMPLETE LAY SHAFT	1		
17	15021771B	COMPLETE MAIN SHAFT	1		
18	17214481A	DRIVEN GEAR 1ST SPEED	1		
19	85611231A	THRUST WASHER 1 MM	1		
20	17214491A	DRIVEN GEAR 5TH SPEED	1		
21	17214471A	DRIVEN GEAR 4TH SPEED	1		

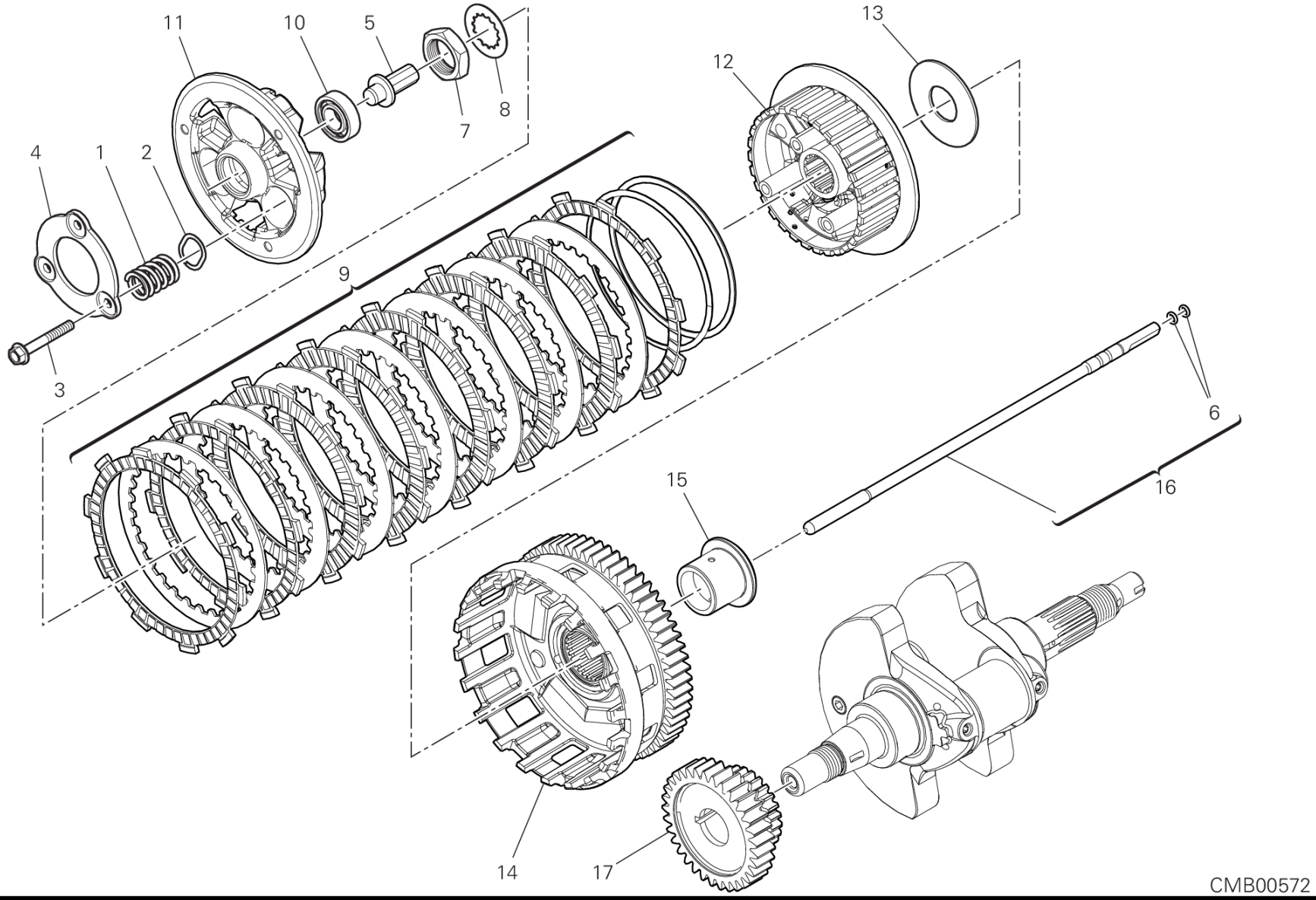
11
10
5
8
7
13
12
4
1
2
9
3
6
16
15
14
17
CMB00572

POS.	CODE	DESCRIPTION	QTY	VALIDITY	NOTES
1	79710881A	SPRING	3		
2	85611391B	THRUST WASHER	3		
3	77215251A	SCREW	3		
4	19410751A	RING	1		
5	81810162A	CLUTCH CONTROL PIN	1		
6	88641731A	O-RING 1.78X4.76	2		
7	75010781A	NUT	1		
8	85110201B	LOCK WASHER	1		
9	19020591A	CLUTCH DISC SET	1		
10	70250861A	BEARING	1		
11	19611021A	DISK, CLUTCH PRESSURE	1		
12	19611011A	PLATE HOLDER HUB	1		
13	85611911A	SPACER	1		
14	19820661A	PRIMARY DRIVEN GEAR COMP.	1		
15	71315901A	SPACER	1		
16	11723691A	CLUTCH CONTROL ROD	1		
17	17011751A	PRIMARY DRIVE FRONT SPROCKET	1		

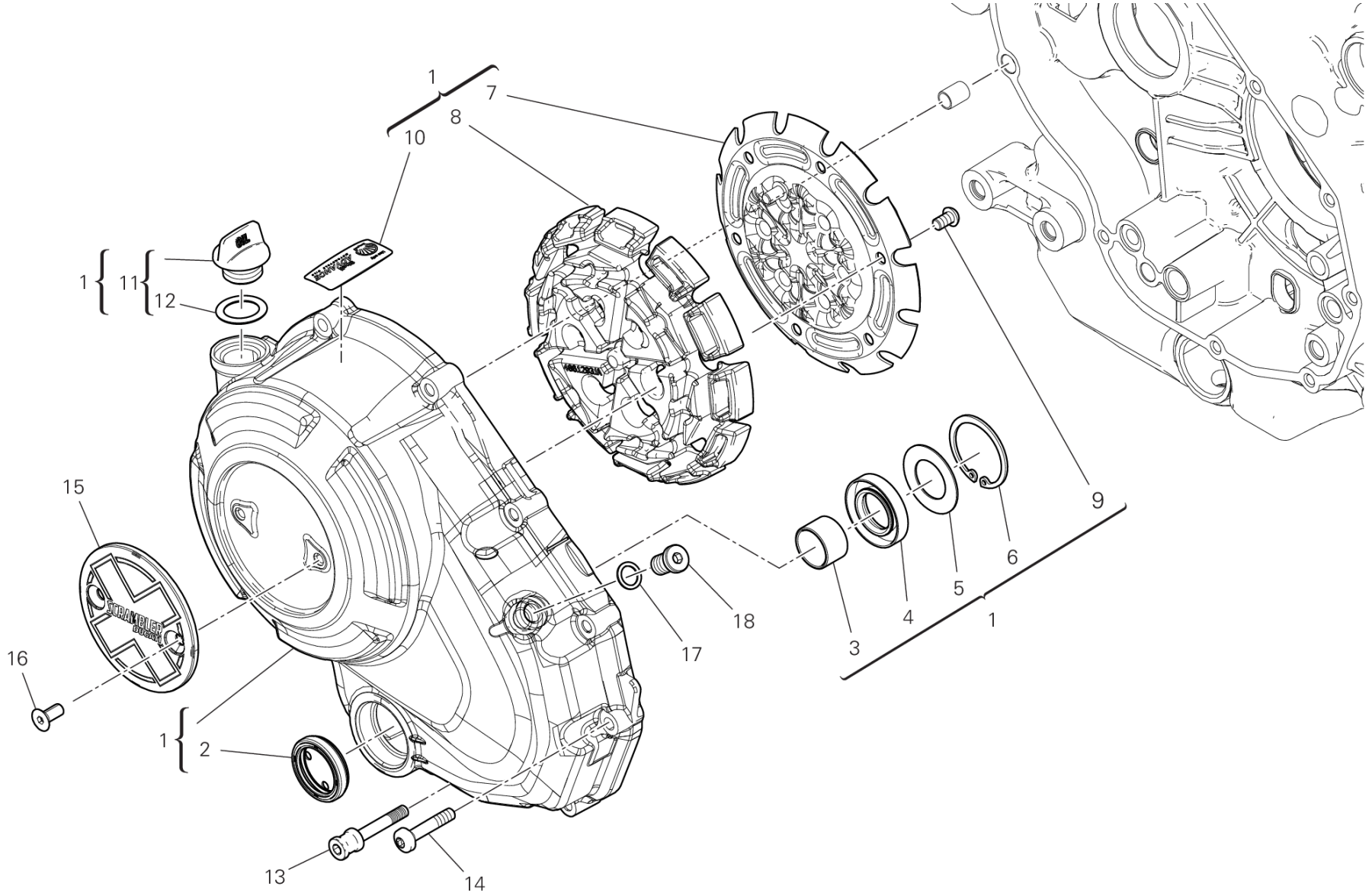

CRT00947

DRAWING 04A - CLUTCH COVER

GROUP ENGINE

POS.	CODE	DESCRIPTION	QTY	VALIDITY	NOTES
1	24311701AY	CLUTCH COVER	1		
2	25440014A	WINDOW, OIL LEVEL CHECK	1		
3	066549680	BUSH	1		
4	93040211A	OIL SEAL	1		
5	85211351A	THRUST WASHER 20.8X37.8X1	1		
6	88450131A	CIRCLIP	1		
7	8271H831B	SHEET ACOUSTIC DAMPER	1		
8	48612931A	DAMPER, SOUND ARRESTER	1		
9	77550200CC	SCREW	6		
10	43315011A	WARNING LABEL	1		
11	89320121A	PLUG ASSY	1		
12	88640891A	O-RING 18.64X3.53	1		
13	77916041D	SCREW, SPECIAL	1		
14	77942032A	SCREW	9		
15	24717501A		1		
16	77750498C	SCREW TSPEI M6X14	2		
17	85250631A	WASHER	1		
18	78011281A	PLUG, THREADED M10X1	1		

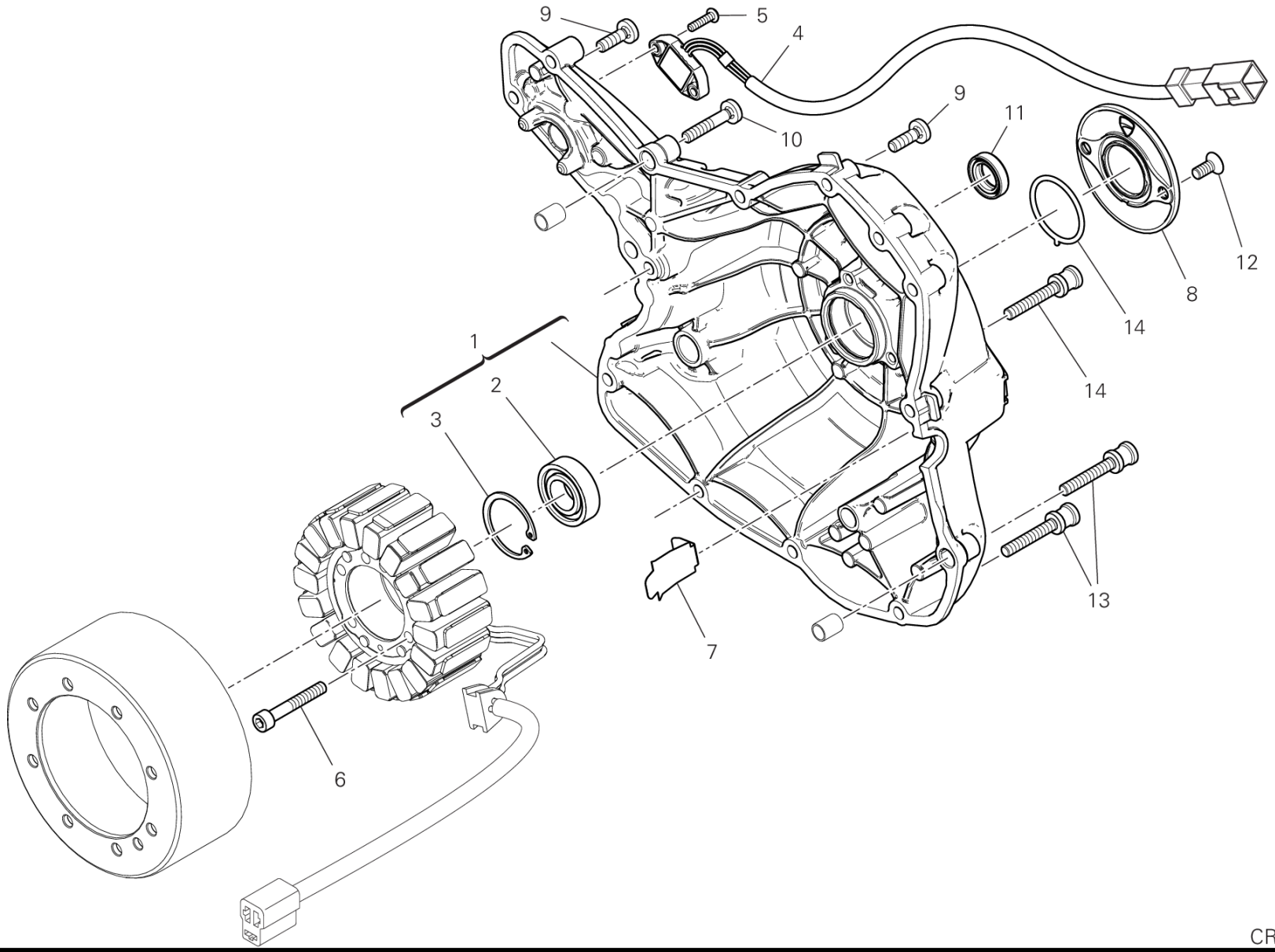

CRT00948

DRAWING 04B - GENERATOR COVER

GROUP ENGINE

POS.	CODE	DESCRIPTION	QTY	VALIDITY	NOTES
1	24221611AY	GENERATOR COVER	1		
2	70250081A	BALL BEARING 6003 TN9 C3	1		
3	735033380	CIRCLIP	1		
4	55243942B	GEARBOX POSITION SENSOR	1		
5	72050069E	SCREW	2		
6	71950418CF	SCREW	3		
7	82716091A	PLATE	1		
8	24717501A		1		
9	77510661B	SCREW	2		
10	77942032A	SCREW	9		
11	93042691A	SEAL RING	1		
12	77750498C	SCREW TSPEI M6X14	2		
13	77916041D	SCREW, SPECIAL	3		
14	88610951A	O-RING 32.99X2.62	1		

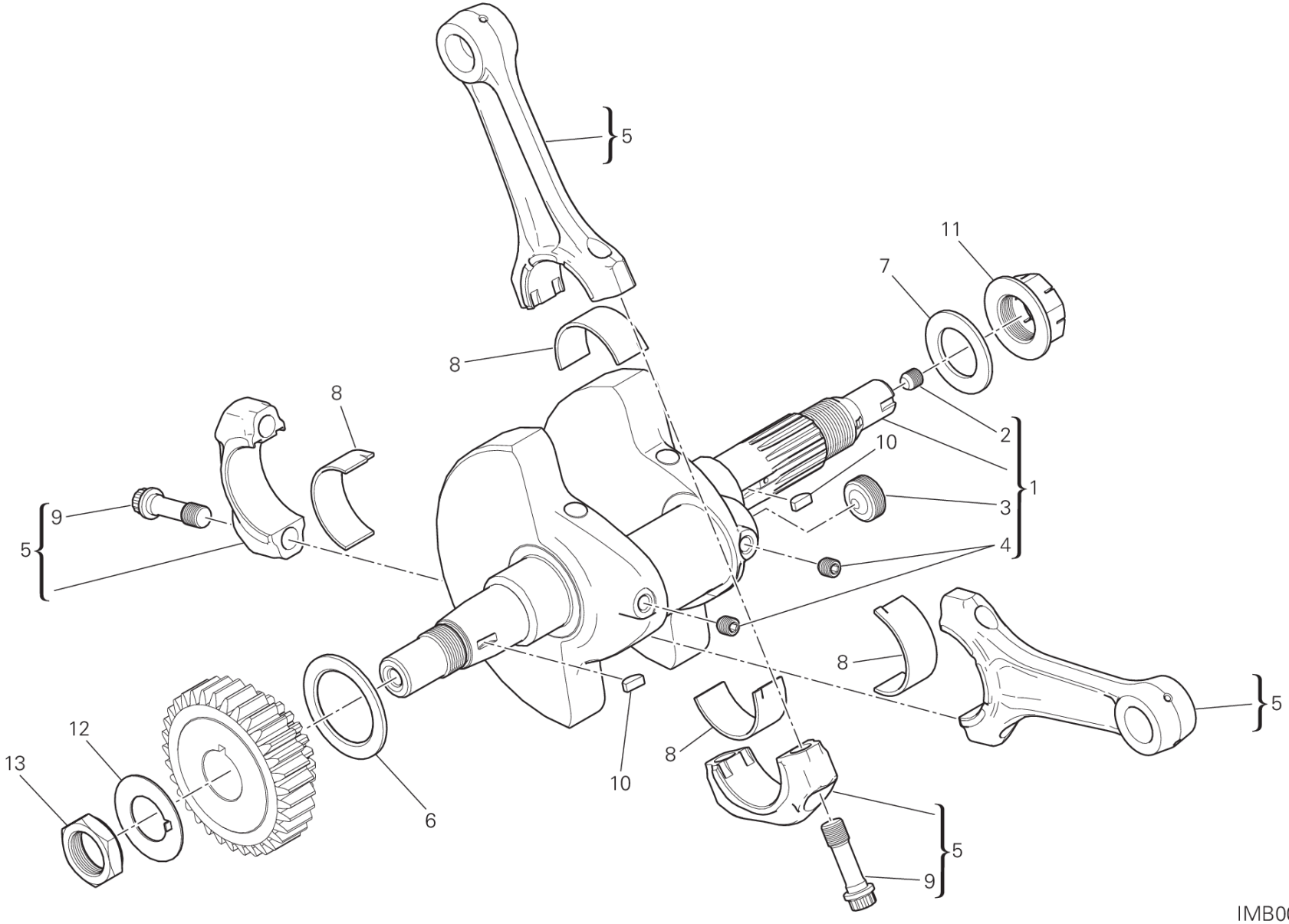
5
11
7
8
8
2
10
1
9
5
3
4
8
5
12
13
10
6
8
5
9
IMB00248

DRAWING 05A - CONNECTING RODS

GROUP ENGINE

POS.	CODE	DESCRIPTION	QTY	VALIDITY	NOTES
1	14621923AR	DRIVE SHAFT COMPLETO	1		
2	77911092A	SCREW, SPECIAL	1		
3	78010161B	THREADED PLUG	1		
4	77915471A	THREADED DOWEL STEI M8X8	2		
5	15620822AC	CONNECTING ROD	2		
	15620823AA	CONNECTING ROD	2		
	15620823AB	CONNECTING ROD	2		
6	85212881A	THRUST WASHER 50X35X1.9	1		
	85212881B	THRUST WASHER 50X35X1.95	1		
	85212881C	SHIM 50X35X2	1		
	85212881D	SHIM 50X35X2.05	1		
	85212881E	THRUST WASHER 50X35X2.1	1		
	85212881F	SHIM 50X35X2.15	1		
	85212881G	SHIM 50X35X2.2	1		
	85212881H	THRUST WASHER 50X35X2.25	1		
	85212881I	THRUST WASHER 50X35X2.3	1		
	85212881J	THRUST WASHER 50X35X2.35	1		
	85212881K	THRUST WASHER 50X35X2.4	1		
	85212881L	THRUST WASHER 50X35X2.45	1		
	85212881M	THRUST WASHER 50X35X2.5	1		
	85212881N	THRUST WASHER 50X35X2.55	1		
7	85212691A	WASHER	1		
8	11210801AA	HALF-BEARING RED	2		
	11210801AB	HALF-BEARING BLUE	2		
9	77914045B	BOLT, CONNECTING ROD	4		
10	68010131A	KEY, WOODRUFF 4X5X10	2		
11	75010121D	NUT, SPECIAL	1		
12	85110191A	WASHER, LOCK	1		
13	75011611A	NUT	1		

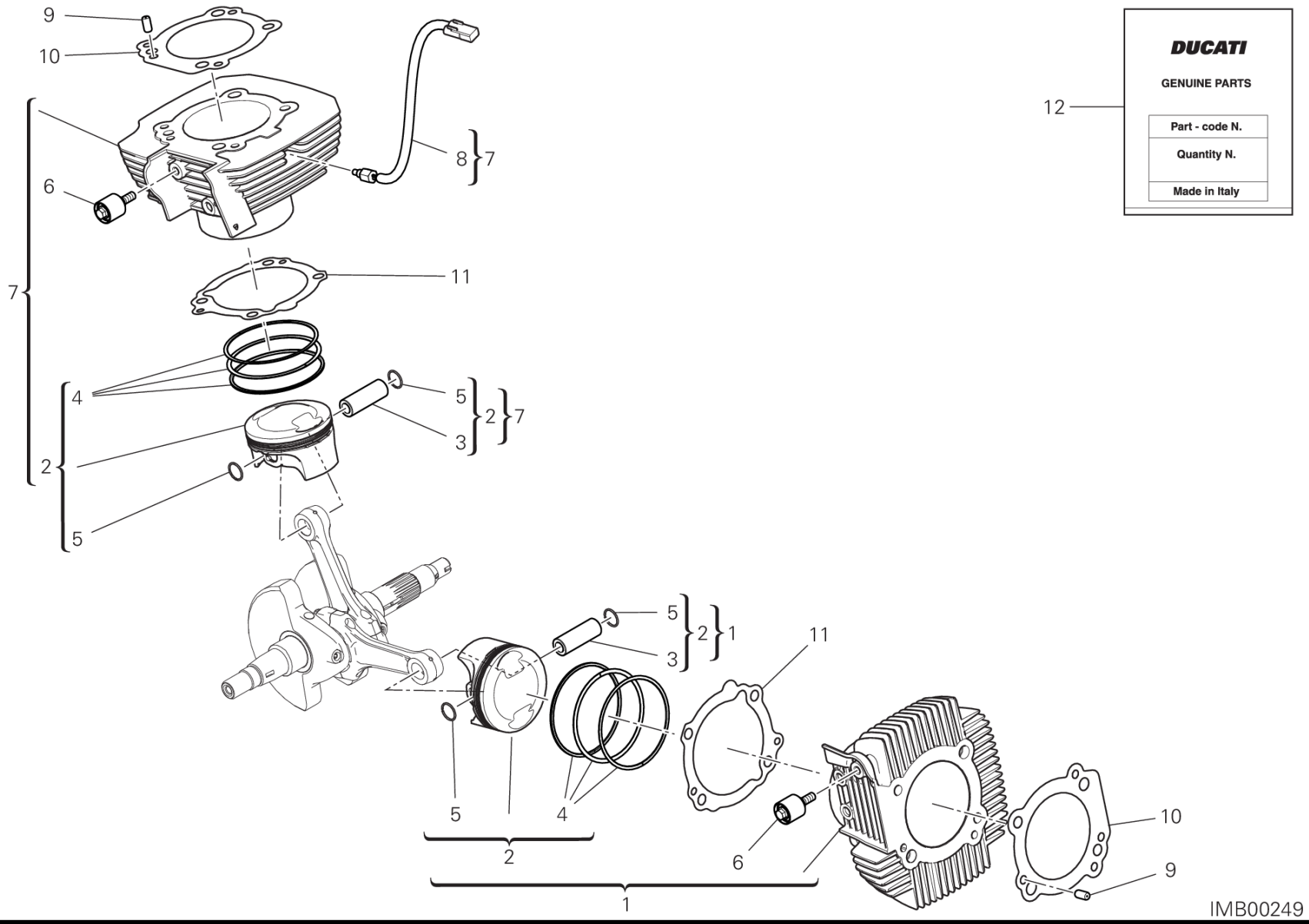
9
10
8
7
6
11
7
4
5
2
7
2
5
3
5
2
1
11
3
5
4
2
6
10
9
1
12
DUCATI
GENUINE PARTS
Part - code N.
Quantity N.
Made in Italy
IMB00249

POS.	CODE	DESCRIPTION	QTY	VALIDITY	NOTES
1	12022922AB	HORIZONTAL CYLINDER-PISTON FIT	1		
2	12221612C	PISTON ASSY	2		
3	12113031A	PISTON PIN	2		
4	12120531B	PISTON RING SET	2		
5	12111741A	CIRCLIP, PISTON PIN	4		
6	45120211A	TENSIONER TIMING BELT FIXED	2		
7	12022912AB	VERTICAL CYLINDER-PISTON FIT	1		
8	55241452A	SENSOR, TEMPERATURE	1		
9	71111721A	PIN DOWEL	2		
10	78611041A	GASKET, CYLINDER HEAD	2		
11	78610851A	CYLINDER-CRANKCASE GASKET	2		
12	79120462B	GASKETS SET	1		

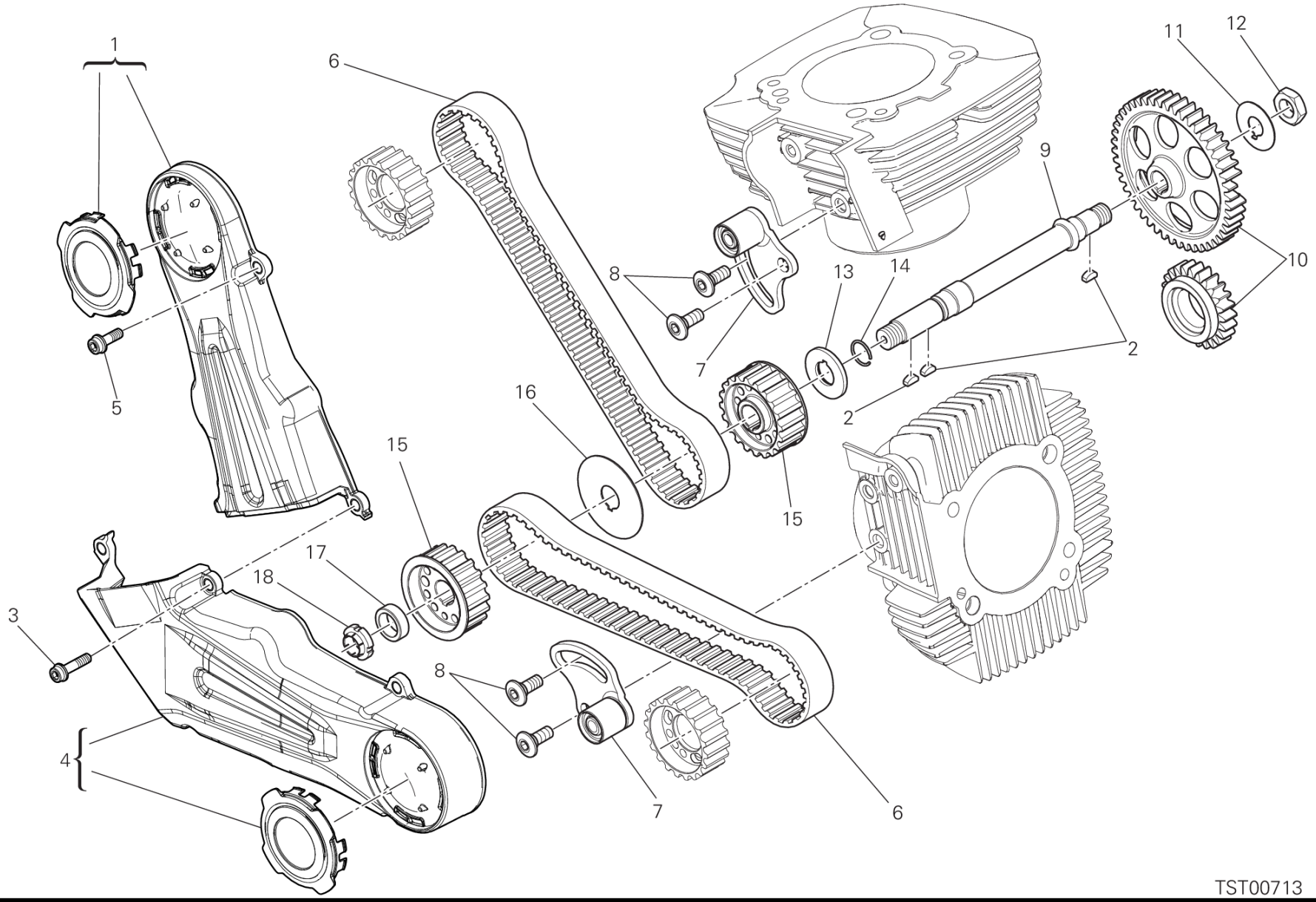
1
6
11
12
9
10
8
13
14
7
2
5
16
15
17
18
3
4
TST00713

DRAWING 07A - TIMING SYSTEM

GROUP ENGINE

POS.	CODE	DESCRIPTION	QTY	VALIDITY	NOTES
1	24521941B		1		
2	68010131A	KEY, WOODRUFF 4X5X10	3		
3	77110491A	SCREW TCEI M6X18	2		
4	24521931C		1		
5	77140667CF	SCREW	5		
6	73740241B	TIMING DRIVE TOOTHED BELT	2		
7	45120201A	TENSIONER, TIMING BELT MOVABLE	2		
8	77210103A	SCREW	4		
9	147Z0011A	LAY SHAFT	1		
10	17121081A	TIMING GEARS SET	1		
11	85110131A	WASHER, LOCK	1		
12	75011601A	NUT M14X1X7	1		
13	71610732A	SPACER	1		
14	88210031A	SNAP RING	1		
15	25510233A	TIMING BELT PULLEY, DRIVE T20	2		
16	85610623A	WASHER, BELT PULLEY	1		
17	71610991B	SPACER	1		
18	70350062A	ELASTIC-STOP RING NUT	1		

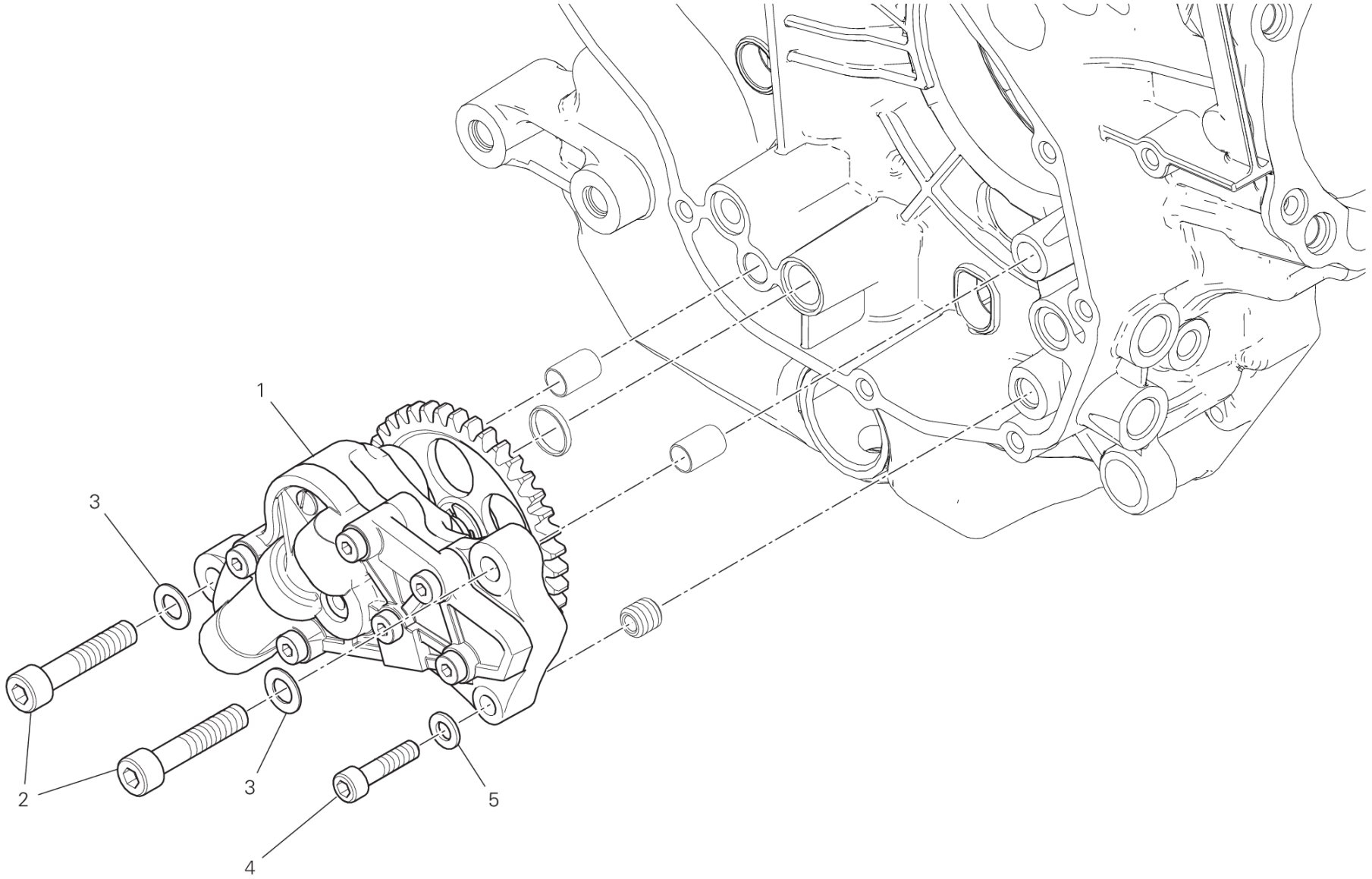

RAF00638

DRAWING 08A - OIL PUMP

GROUP ENGINE

POS.	CODE	DESCRIPTION	QTY	VALIDITY	NOTES
1	17420434A	OIL PUMP ASSY	1		
2	77151298B	SCREW TCEI M8X40	2		
3	85310021A	SPRING WASHER 8 MM	2		
4	77110518B	SCREW TCEI M6X25	1		
5	85310041A	SPRING WASHER 6 MM	1		

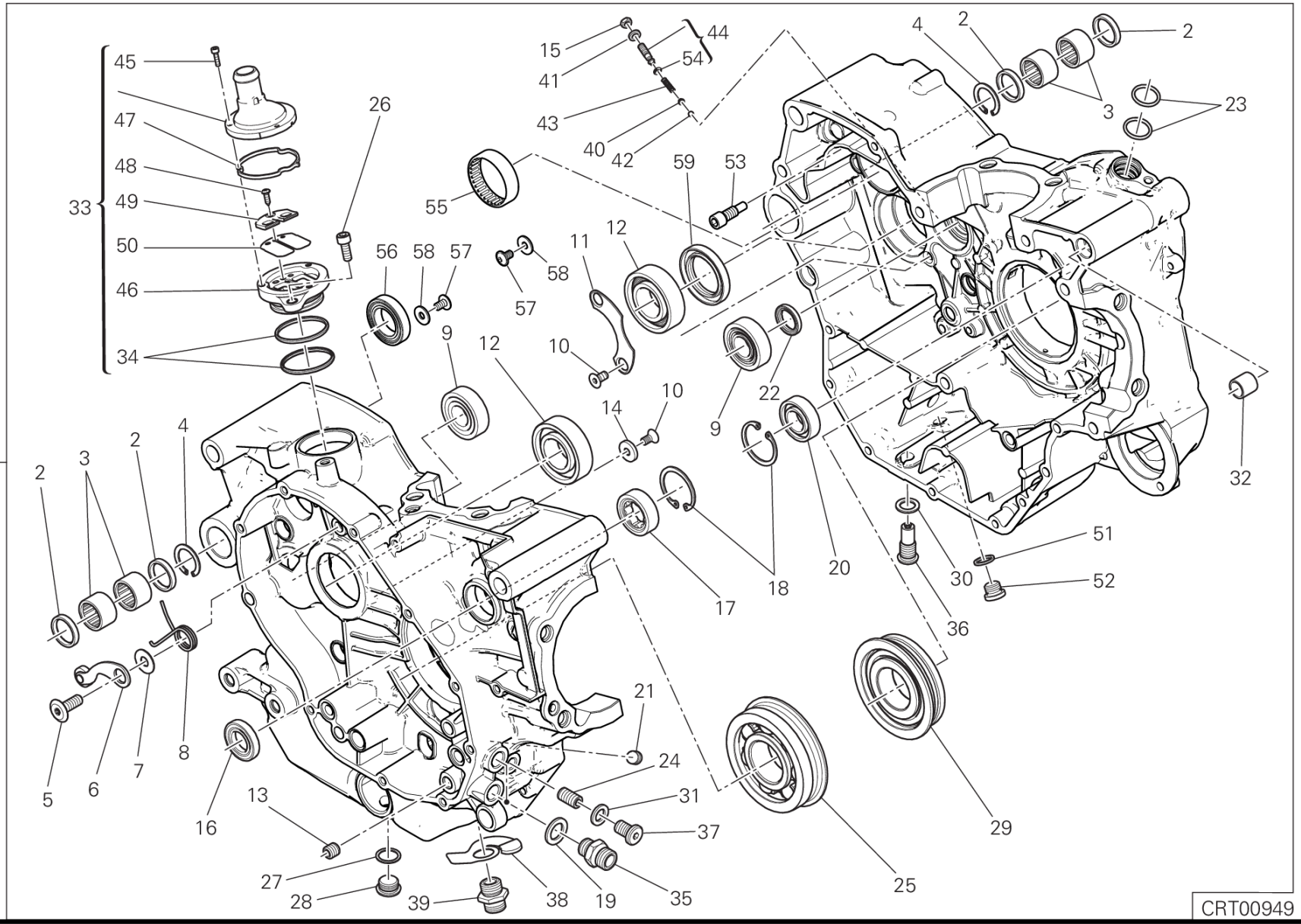
1
2
3
4
5
6
7
8
9
10
11
12
13
14
15
16
17
18
19
20
21
22
23
24
25
26
27
28
29
30
31
32
33
34
35
36
37
38
39
40
41
42
43
44
45
46
47
48
49
50
51
52
53
54
55
56
57
58
59
CRT00949

DRAWING 09A - HALF-CRANKCASES PAIR

GROUP ENGINE

POS.	CODE	DESCRIPTION	QTY	VALIDITY	NOTES
1	225P0252A	ASSIEME CARTER COMPLETO	1		
2	93041271A	SEAL RING 20X26X4	4		
3	70140681A	NEEDLE BUSH	4		
4	88440531A	SPRING RING	2		
5	77910391A	SCREW M8X21.5	1		
6	45520192A	GEAR FIXING CLICK ASSEMBLY	1		
7	85210532A	WASHER 8.2X20X1	1		
8	79910491D	SPRING, RETURN	1		
9	70240401B	BEARING 17X40X12	2		
10	720941616	SCREW TSPEI M6X12	4		
11	036749275	PLATE, RETAINER	1		
12	751202567	BEARING	2		
13	067049310	BUSH	1		
14	85611481A	WASHER	2		
15	74710151A	NUT	1		
16	93041631B	SEAL RING	1		
17	70242261A	BEARING	1		
18	735033380	CIRCLIP	2		
19	78710111A	GASKET, ALUMINIUM 14X22X2	2		
20	70250081A	BALL BEARING 6003 TN9 C3	1		
21	77950621A	THREADED DOWEL M10X1	1		
22	93040932A	OIL SEAL	1		
23	88640331A	O-RING 17.96X2.62	2		
24	77840041A	THREADED DOWEL M10X1	1		
25	70240932A	BEARING 35X85X23	1		
26	77150658B	SCREW TCEI M6X16	1		
27	85211201A	ALUMINIUM GASKET	1		
28	77911982A	THREADED PLUG M15X1	1		
29	70240921A	BEARING 35X78X19	1		
30	85250421A	COPPER GASKET 12.2X18X1.5 MM	1		
31	85211951A	GASKET 10.5X17X2	1		
32	71110951A	PIN DOWEL	2		
33	59320621B	BREATHER VALVE	1		
34	46320222A	O-RING	2		
35	81510221A	NIPPLE, HOSEM14X1.5	2		

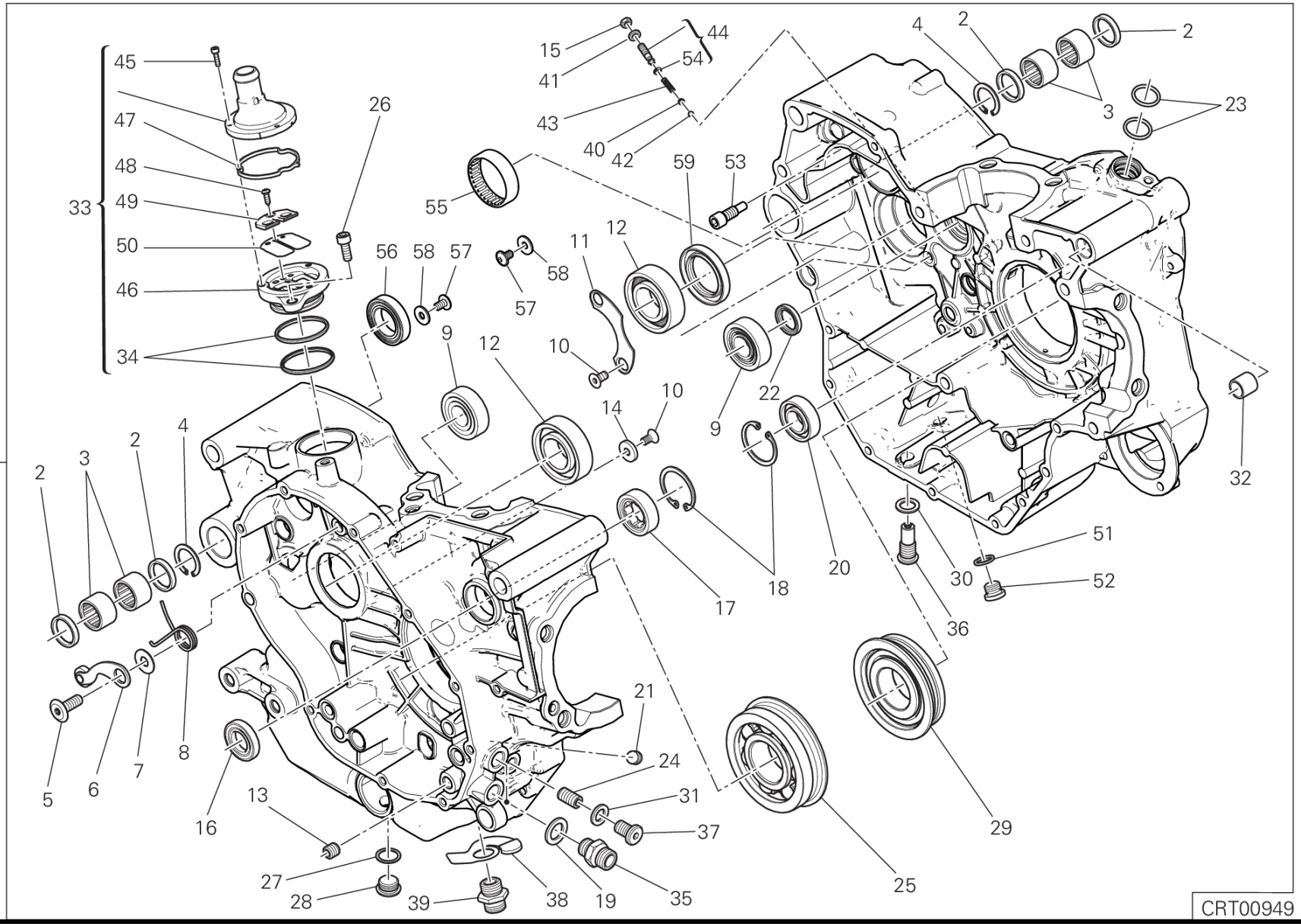
1
2
3
4
5
6
7
8
9
10
11
12
13
14
15
16
17
18
19
20
21
22
23
24
25
26
27
28
29
30
31
32
33
34
35
36
37
38
39
40
41
42
43
44
45
46
47
48
49
50
51
52
53
54
55
56
57
58
59
CRT00949

POS.	CODE	DESCRIPTION	QTY	VALIDITY	NOTES
36	89320062A	PLUG, OIL DRAIN	1		
37	77911622A	SCREW TCEI M10X1.5X16	1		
38	79920771C	BYPASS SPRING	1		
39	81510281A	BOLT UNION	1		
40	83110151A	PLATE	1		
41	85640141A	WASHER	1		
42	84740061A	BALL	1		
43	79940121A	SPRING	1		
44	77927172B	SCREW	1		
45	77150068B	SCREW	3		
46	59310601B	HOLDER READ VALVE	1		
47	78811151A	GASKET	1		
48	77250341B	SCREW, TAPPING 3.5X12	1		
49	82716031A	SPACER	1		
50	81110021A	REED VALVE ASSY	1		
51	85250261A	GASKET, ALUMINIUM 12X16X1.5	1		
52	77910262A	SCREW M12X1	1		
53	77919881A	SCREW, SPECIAL	2		
54	88641961A	O-RING	1		
55	70242211A	NEEDLE BUSH	1		
56	70250412A	BALL BEARING	1		
57	77240398CC	SCREW	3		
58	85214082A	WASHER	3		
59	93042762A	SEAL RING	1		

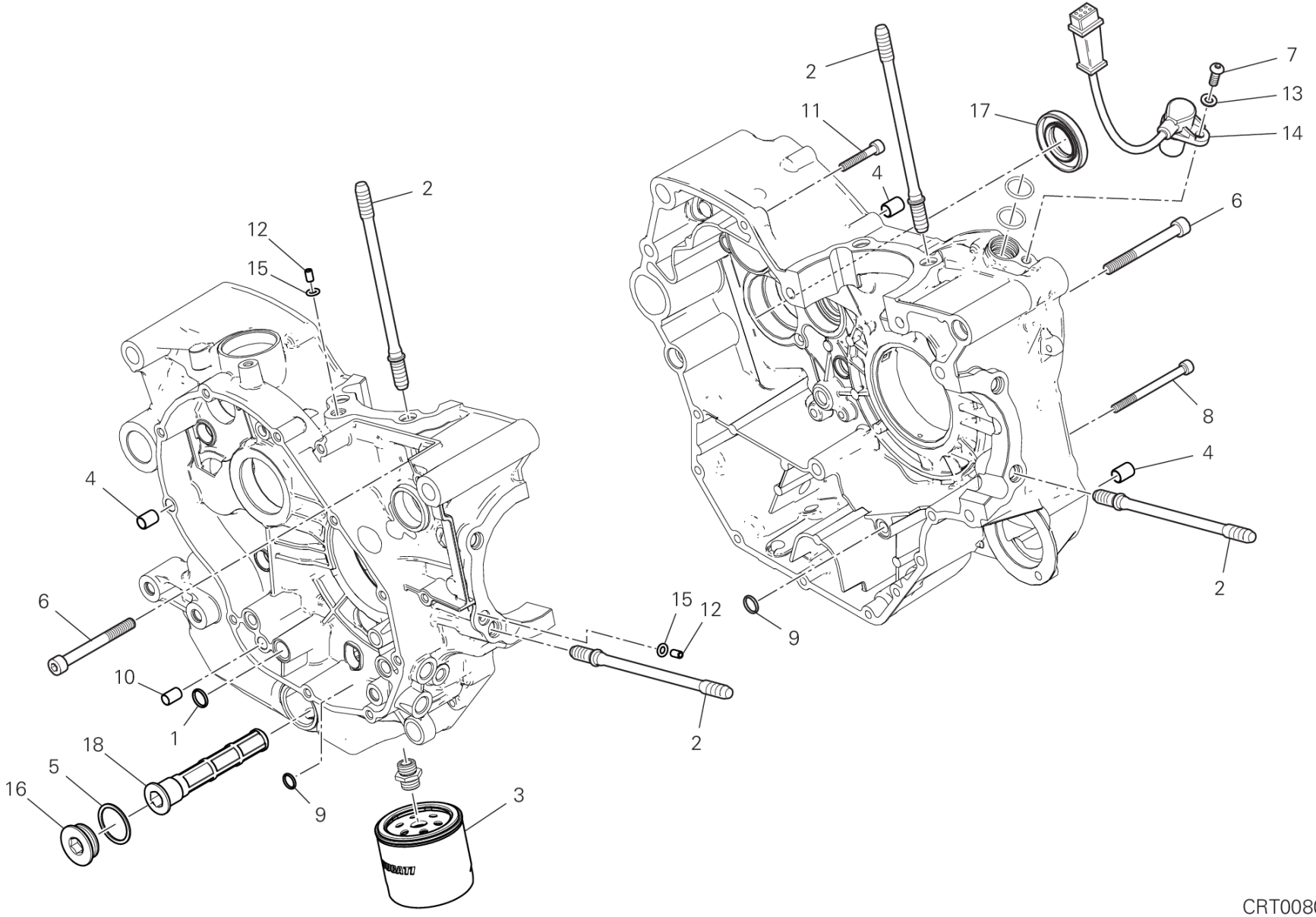
2
11
17
7
13
14
4
6
8
4
2
9
2
12
15
4
6
10
1
18
5
16
9
3
15
12
2
CRT00800

DRAWING 09B - HALF-CRANKCASES PAIR

GROUP ENGINE

POS.	CODE	DESCRIPTION	QTY	VALIDITY	NOTES
1	88640371A	O-RING	1		
2	76610671C	STUD BOLT FASTENING HEAD CYLINDER	8		
3	44440039A	FILTER, OIL	1		
4	71111601A	PIN DOWEL	3		
5	85250051A	GASKET 32X38X1.5	1		
6	77151368B	SCREW TCEI M8X75	7		
7	77550211A	SCREW TBEI M6X16	1		
8	77150808B	SCREW TCEI M6X75	2		
9	88641321A	O-RING	3		
10	075949280	LOCATING DOWEL	2		
11	77150728B	SCREW TCEI M6X35	7		
12	71111281A	PIN DOWEL	2		
13	85310031A	SPRING WASHER 6 MM	1		
14	55241321C	SENSOR, TIMING & RPM	1		
15	88641991A	O-RING	2		
16	87310371A	THREADED PLUG M32X1.5	1		
17	93041651A	SEAL RING	1		
18	89420091A	STRAINER, OIL	1		

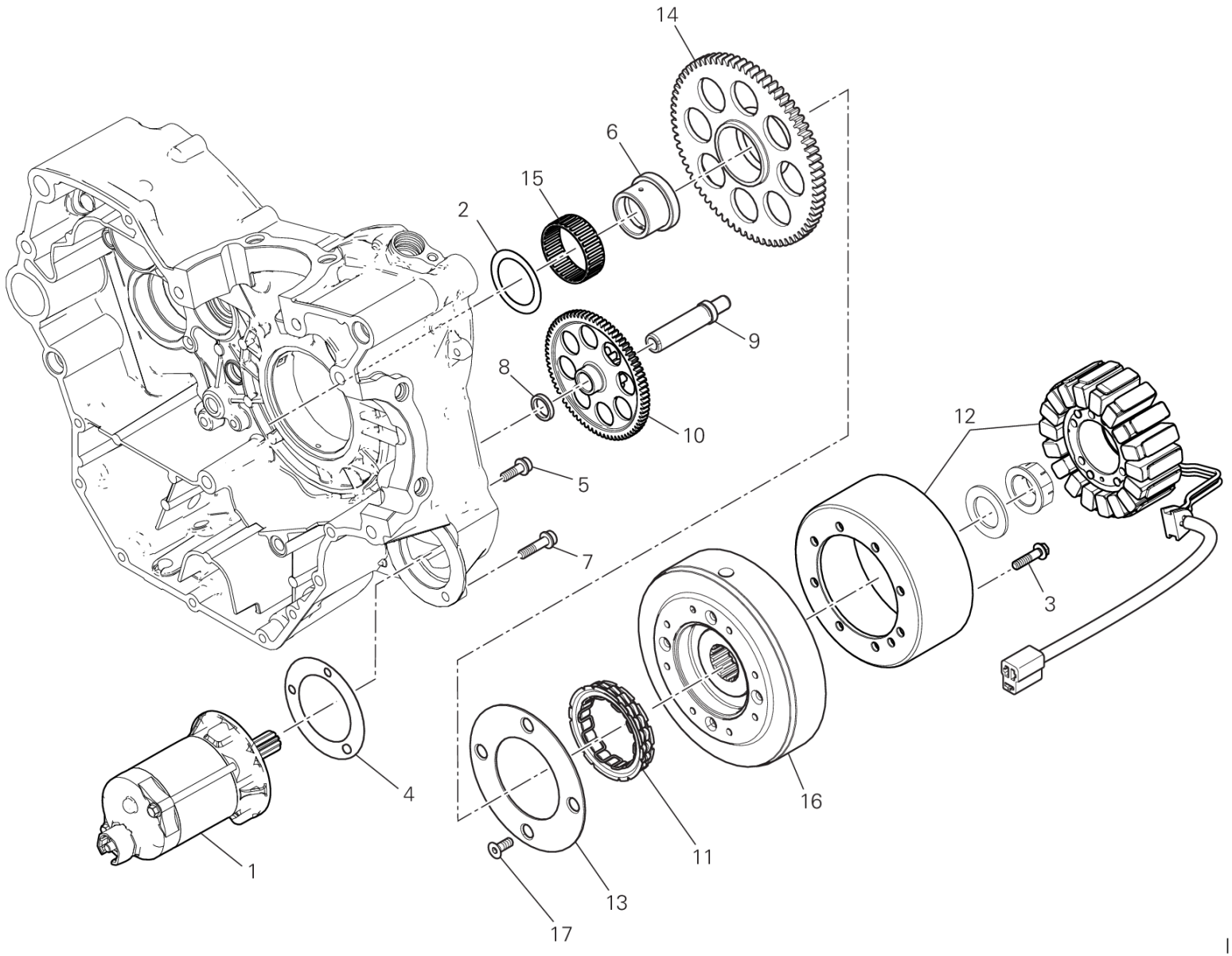

IMP01582

POS.	CODE	DESCRIPTION	QTY	VALIDITY	NOTES
1	27040221A	STARTING MOTOR	1		
2	061950065	THRUST WASHER 35.5X48	1		
3	77253300ZF	SCREW	8		
4	78810542A	ENGINE STARTER GASKET	1		
5	77140677CF	SCREW TCEIF M6X20	2		
6	88110101C	BUSH	1		
7	77140697CF	SCREW	1		
8	71319191A	SPACER	1		
9	82113471A	STARTER REDUCTION SHAFT	1		
10	176Z0021A	IDLE GEAR T74/13	1		
11	70140471A	CLUTCH, ONE WAY	1		
12	26420471A	GENERATOR DENSO	1		
13	160Z0041A	PLATE	1		
14	17310291A	ELECTRIC STARTER DRIVEN GEAR	1		
15	70140031A	BEARING, NEEDLE	1		
16	276Z0061A	IGNITION FLYWHEEL	1		
17	77750508CC	SCREW	4		

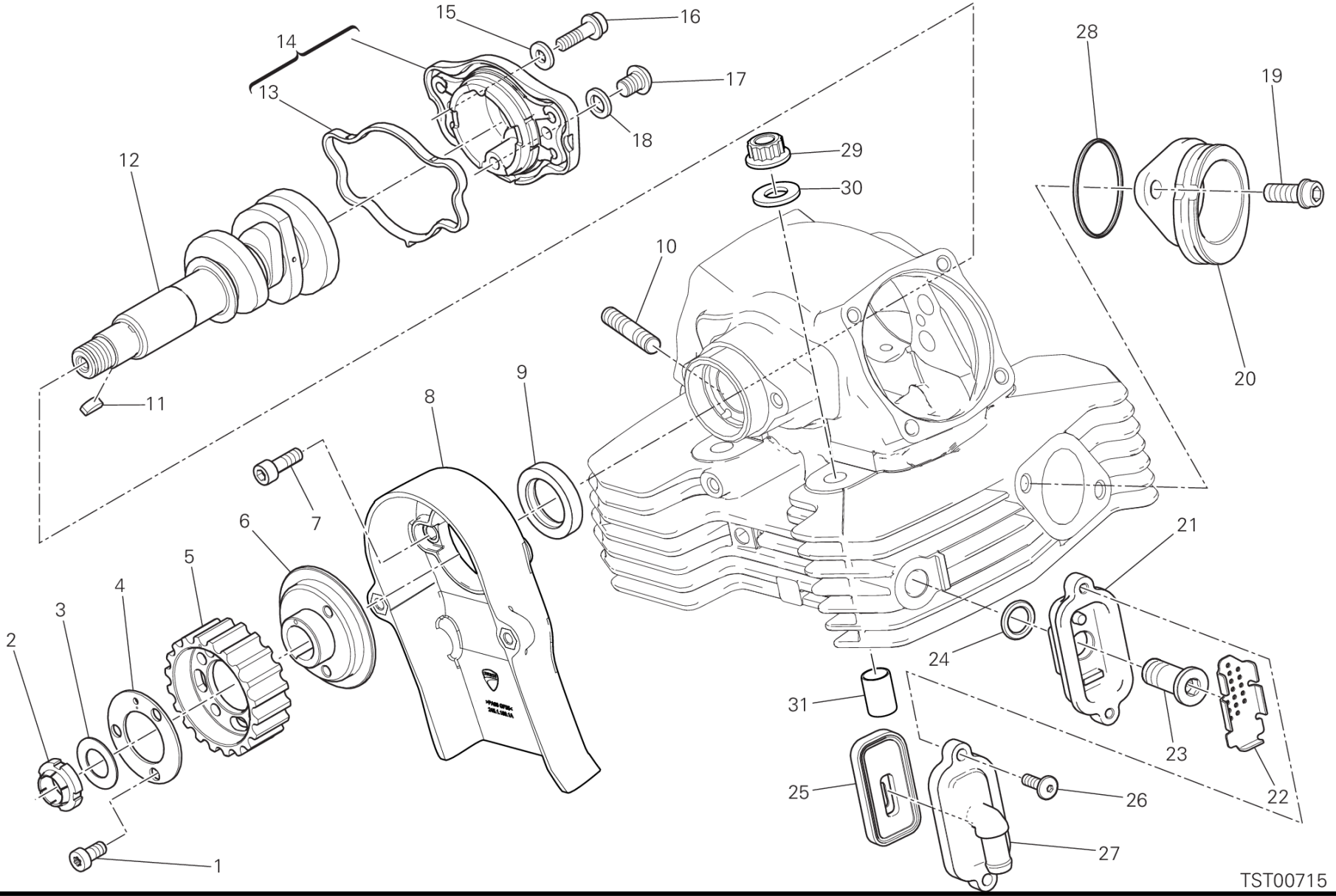
1
2
3
4
5
6
7
8
9
10
11
12
13
14
15
16
17
18
19
20
21
22
23
24
25
26
27
28
29
30
31
TST00715

DRAWING 11A - VERTICAL CYLINDER HEAD - TIMING

GROUP ENGINE

POS.	CODE	DESCRIPTION	QTY	VALIDITY	NOTES
1	77950302A	SCREW TC M6X12	3		
2	70350062A	ELASTIC-STOP RING NUT	1		
3	85211731A	WASHER 15.2X24X1	1		
4	85610743A	WASHER, SPECIAL	1		
5	25510243A	TIMING BELT PULLEY, DRIVEN T20	1		
6	16011051A	RING, REAR PULLEY	1		
7	77110491A	SCREW TCEI M6X18	2		
8	24511891A	VERTICAL BELT INTERNAL COVER	1		
9	93041621B	SEAL RING	1		
10	76640172A	STUD BOLT M8X30	2		
11	68010131A	KEY, WOODRUFF 4X5X10	1		
12	14814921A	VERTICAL HEAD CAMSHAFT	1		
13	78811111C	GASKET	1		
14	23520422A4	SIDE CAP	1		
15	85212461A	WASHER, BRASS 6X13X2 MM	2		
16	77113861A	SCREW	2		
17	77510661B	SCREW	1		
18	85212971A	COPPER GASKET	1		
19	77157238B	SCREW TCEIF M8X20	2		
20	16014781A	INTAKE MANIFOLD	1		
21	16311231A	HOLDER	1		
22	82716351A	PLATE	1		
23	77918701A	SCREW, SPECIAL	1		
24	88640991A	O-RING	1		
25	81140012B	VALVE	1		
26	77240288C	SCREW	2		
27	24714081A	COVER	1		
28	46320222A	O-RING	1		
29	74810501A	NUT M10X1.5	4		
30	85610642A	WASHER, SPECIAL 10.5X21X2	4		
31	71111261A	BUSH	2		

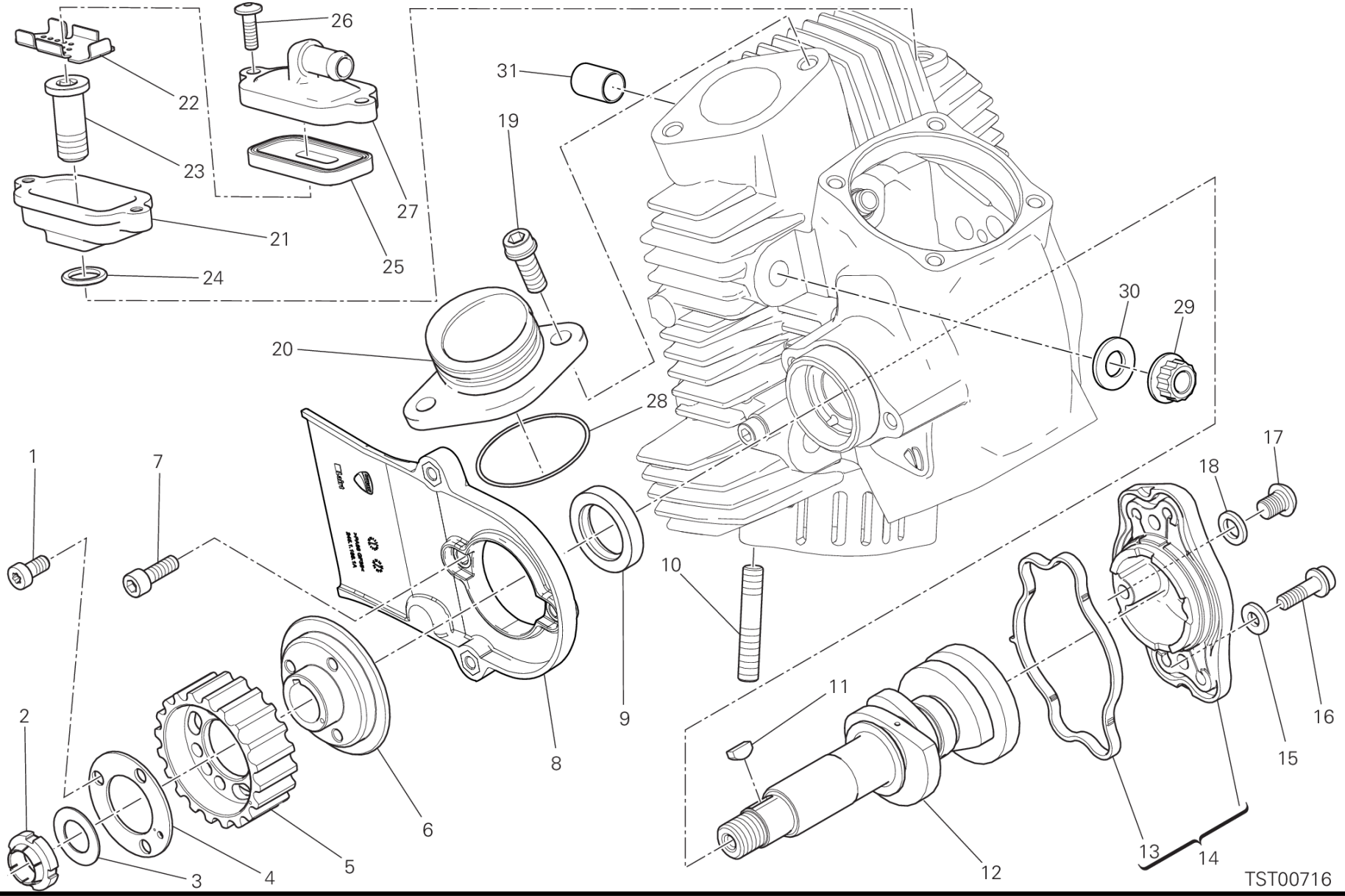
26
22
23
27
21
25
24
31
19
20
28
30
29
1
7
18
17
10
2
8
9
11
16
15
6
5
4
3
13
14
12
TST00716

POS.	CODE	DESCRIPTION	QTY	VALIDITY	NOTES
1	77950302A	SCREW TC M6X12	3		
2	70350062A	ELASTIC-STOP RING NUT	1		
3	85211731A	WASHER 15.2X24X1	1		
4	85610743A	WASHER, SPECIAL	1		
5	25510243A	TIMING BELT PULLEY, DRIVEN T20	1		
6	16011051A	RING, REAR PULLEY	1		
7	77110491A	SCREW TCEI M6X18	2		
8	24511881B	HORIZONTAL BELT INTERNAL COVER	1		
9	93041621B	SEAL RING	1		
10	76640172A	STUD BOLT M8X30	2		
11	68010131A	KEY, WOODRUFF 4X5X10	1		
12	14814911A	HORIZONTAL HEAD CAMSHAFT	1		
13	78811111C	GASKET	1		
14	23520422A4	SIDE CAP	1		
15	85212461A	WASHER, BRASS 6X13X2 MM	2		
16	77113861A	SCREW	2		
17	77510661B	SCREW	1		
18	85212971A	COPPER GASKET	1		
19	77157238B	SCREW TCEIF M8X20	2		
20	16014781A	INTAKE MANIFOLD	1		
21	16311231A	HOLDER	1		
22	82716351A	PLATE	1		
23	77918701A	SCREW, SPECIAL	1		
24	88640991A	O-RING	1		
25	81140012B	VALVE	1		
26	77240288C	SCREW	2		
27	24714081A	COVER	1		
28	46320222A	O-RING	1		
29	74810501A	NUT M10X1.5	4		
30	85610642A	WASHER, SPECIAL 10.5X21X2	4		
31	71111261A	BUSH	2		

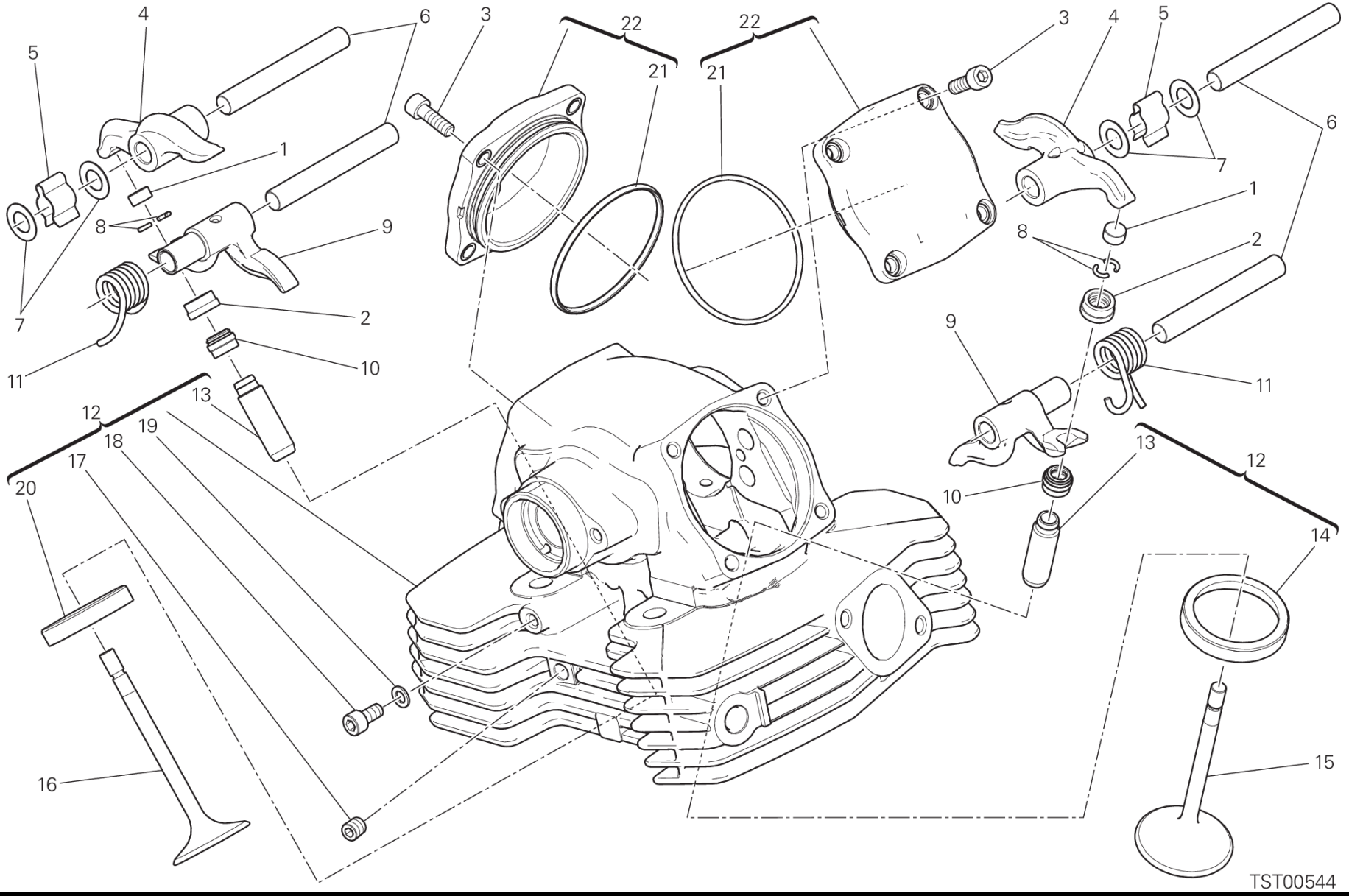
TST00544

POS.	CODE	DESCRIPTION	QTY	VALIDITY	NOTES
1	84010012A	ADJUSTER, OPENING ROCKER ARM 2.00 MM	2		
	84010022A	ADJUSTER, OPENING ROCKER ARM 2.05 MM	2		
	84010032A	ADJUSTER, OPENING ROCKER ARM 2.10 MM	2		
	84010042A	ADJUSTER, OPENING ROCKER ARM 2.15 MM	2		
	84010052A	ADJUSTER, OPENING ROCKER ARM 2.20 MM	2		
	84010062A	ADJUSTER, OPENING ROCKER ARM 2.25 MM	2		
	84010072A	ADJUSTER, OPENING ROCKER ARM 2.30 MM	2		
	84010082A	ADJUSTER, OPENING ROCKER ARM 2.35 MM	2		
	84010092A	ADJUSTER, OPENING ROCKER ARM 2.40 MM	2		
	84010102A	ADJUSTER, OPENING ROCKER ARM 2.45 MM	2		
	84010112A	ADJUSTER, OPENING ROCKER ARM 2.50 MM	2		
	84010122A	ADJUSTER, OPENING ROCKER ARM 2.55 MM	2		
	84010132A	ADJUSTER, OPENING ROCKER ARM 2.60 MM	2		
	84010142A	ADJUSTER, OPENING ROCKER ARM 2.65 MM	2		
	84010152A	ADJUSTER, OPENING ROCKER ARM 2.70 MM	2		
	84010162A	ADJUSTER, OPENING ROCKER ARM 2.75 MM	2		
	84010172A	ADJUSTER, OPENING ROCKER ARM 2.80 MM	2		
	84010182A	ADJUSTER, OPENING ROCKER ARM 2.85 MM	2		
	84010192A	ADJUSTER, OPENING ROCKER ARM 2.90 MM	2		
	84010202A	ADJUSTER, OPENING ROCKER ARM 2.95 MM	2		
	84010212A	ADJUSTER, OPENING ROCKER ARM 3.00 MM	2		
	84010222A	ADJUSTER, OPENING ROCKER ARM 3.05 MM	2		
	84010232A	ADJUSTER, OPENING ROCKER ARM 3.10 MM	2		
	84010242A	ADJUSTER, OPENING ROCKER ARM 3.15 MM	2		
	84010252A	ADJUSTER, OPENING ROCKER ARM 3.20 MM	2		
	84010262A	ADJUSTER, OPENING ROCKER ARM 3.25 MM	2		
	84010272A	ADJUSTER, OPENING ROCKER ARM 3.30 MM	2		
	84010282A	ADJUSTER, OPENING ROCKER ARM 3.35 MM	2		
	84010292A	ADJUSTER, OPENING ROCKER ARM 3.40 MM	2		
	84010302A	ADJUSTER, OPENING ROCKER ARM 3.45 MM	2		
	84010312A	ADJUSTER, OPENING ROCKER ARM 1.80 MM	2		
	84010322A	ADJUSTER, OPENING ROCKER ARM 1.85 MM	2		
	84010332A	ADJUSTER, OPENING ROCKER ARM 1.90 MM	2		
	84010342A	ADJUSTER, OPENING ROCKER ARM 1.95 MM	2		
	84010722A	ADJUSTER, OPENING ROCKER ARM 3.60 MM	2		

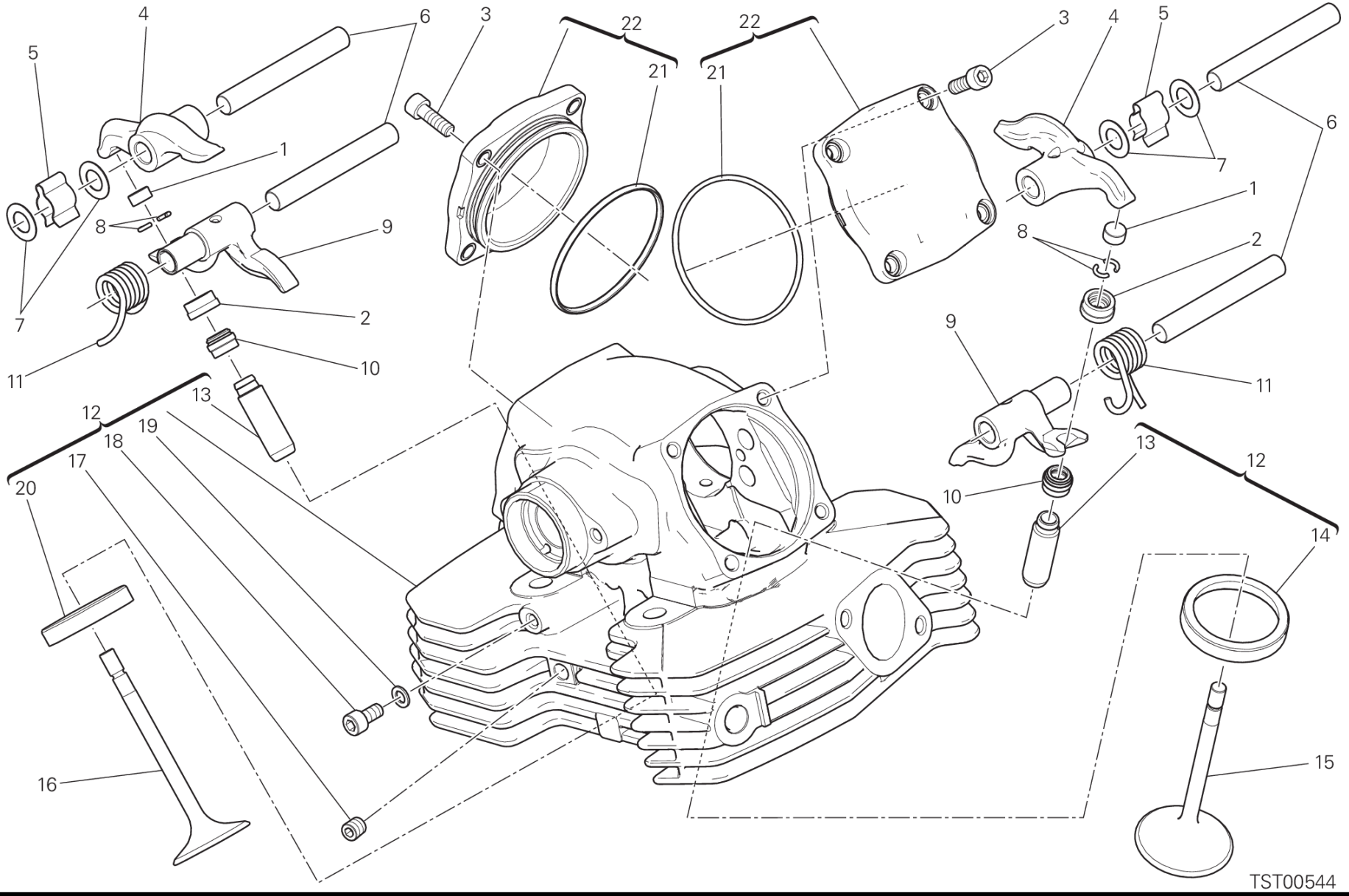
TST00544

POS.	CODE	DESCRIPTION	QTY	VALIDITY	NOTES
	84010732A	ADJUSTER, OPENING ROCKER ARM 3.80 MM	2		
	84011082A	ADJUSTER, OPENING ROCKER ARM 3.50 MM	2		
	84011092A	ADJUSTER, OPENING ROCKER ARM 3.55 MM	2		
	84011102A	ADJUSTER, OPENING ROCKER ARM 3.65 MM	2		
	84011112A	ADJUSTER, OPENING ROCKER ARM 3.70 MM	2		
	84011122A	ADJUSTER, OPENING ROCKER ARM 3.75 MM	2		
	84011132A	ADJUSTER, OPENING ROCKER ARM 3.85 MM	2		
	84011142A	ADJUSTER, OPENING ROCKER ARM 3.9 MM	2		
2	84010412B	ADJUSTER, CLOSING ROCKER ARM 2.20 MM	2		
	84010422B	ADJUSTER, CLOSING ROCKER ARM 2.25 MM	2		
	84010432B	ADJUSTER, CLOSING ROCKER ARM 2.30 MM	2		
	84010442B	ADJUSTER, CLOSING ROCKER ARM 2.35 MM	2		
	84010452B	ADJUSTER, CLOSING ROCKER ARM 2.40 MM	2		
	84010462B	ADJUSTER, CLOSING ROCKER ARM 2.45 MM	2		
	84010472B	ADJUSTER, CLOSING ROCKER ARM 2.50 MM	2		
	84010482B	ADJUSTER, CLOSING ROCKER ARM 2.55 MM	2		
	84010492B	ADJUSTER, CLOSING ROCKER ARM 2.60 MM	2		
	84010502B	ADJUSTER, CLOSING ROCKER ARM 2.65 MM	2		
	84010512B	ADJUSTER, CLOSING ROCKER ARM 2.70 MM	2		
	84010522B	ADJUSTER, CLOSING ROCKER ARM 2.75 MM	2		
	84010532B	ADJUSTER, CLOSING ROCKER ARM 2.80 MM	2		
	84010542B	ADJUSTER, CLOSING ROCKER ARM 2.85 MM	2		
	84010552B	ADJUSTER, CLOSING ROCKER ARM 2.90 MM	2		
	84010562B	ADJUSTER, CLOSING ROCKER ARM 2.95 MM	2		
	84010572B	ADJUSTER, CLOSING ROCKER ARM 3.00 MM	2		
	84010582B	ADJUSTER, CLOSING ROCKER ARM 3.05 MM	2		
	84010592B	ADJUSTER, CLOSING ROCKER ARM 3.10 MM	2		
	84010602B	ADJUSTER, CLOSING ROCKER ARM 3.15 MM	2		
	84010612B	ADJUSTER, CLOSING ROCKER ARM 3.20 MM	2		
	84010622B	ADJUSTER, CLOSING ROCKER ARM 3.25 MM	2		
	84010632B	ADJUSTER, CLOSING ROCKER ARM 3.30 MM	2		
	84010642B	ADJUSTER, CLOSING ROCKER ARM 3.35 MM	2		
	84010652B	ADJUSTER, CLOSING ROCKER ARM 3.40 MM	2		
	84010662B	ADJUSTER, CLOSING ROCKER ARM 3.45 MM	2		
	84010672B	ADJUSTER, CLOSING ROCKER ARM 3.50 MM	2		

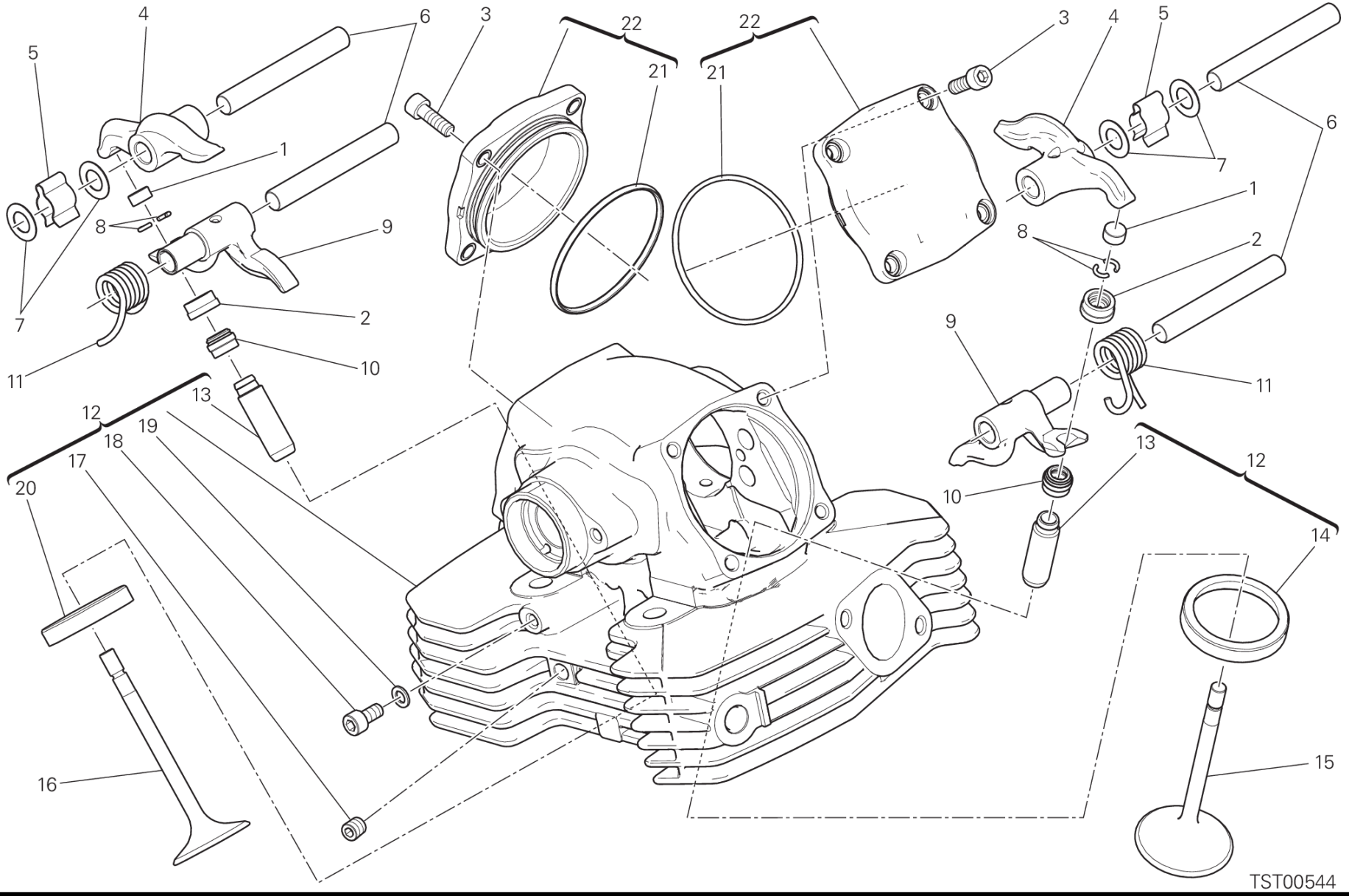
TST00544

POS.	CODE	DESCRIPTION	QTY	VALIDITY	NOTES
	84010682B	ADJUSTER, CLOSING ROCKER ARM 3.55 MM	2		
	84010692B	ADJUSTER, CLOSING ROCKER ARM 3.60 MM	2		
	84010702B	ADJUSTER, CLOSING ROCKER ARM 3.65 MM	2		
	84010712B	ADJUSTER, CLOSING ROCKER ARM 3.70 MM	2		
	84010722B	ADJUSTER, CLOSING ROCKER ARM 3.75 MM	2		
	84010732B	ADJUSTER, CLOSING ROCKER ARM 3.80 MM	2		
	84010742B	ADJUSTER, CLOSING ROCKER ARM 3.85 MM	2		
	84010752B	ADJUSTER, CLOSING ROCKER ARM 3.90 MM	2		
	84010762B	ADJUSTER, CLOSING ROCKER ARM 3.95 MM	2		
	84010772B	ADJUSTER, CLOSING ROCKER ARM 4.00 MM	2		
	84010782B	ADJUSTER, CLOSING ROCKER ARM 4.05 MM	2		
	84010792B	ADJUSTER, CLOSING ROCKER ARM 4.10 MM	2		
	84010802B	ADJUSTER, CLOSING ROCKER ARM 4.15 MM	2		
	84010812B	ADJUSTER, CLOSING ROCKER ARM 4.20 MM	2		
	84010822B	ADJUSTER, CLOSING ROCKER ARM 4.25 MM	2		
	84010832B	ADJUSTER, CLOSING ROCKER ARM 4.30 MM	2		
	84010842B	ADJUSTER, CLOSING ROCKER ARM 4.35 MM	2		
	84010852B	ADJUSTER, CLOSING ROCKER ARM 4.40 MM	2		
	84010862B	ADJUSTER, CLOSING ROCKER ARM 4.45 MM	2		
	84010872B	ADJUSTER, CLOSING ROCKER ARM 4.50 MM	2		
3	77150668BA	SCREW M6X18	8		
4	208Z0011A	OPEN. ROCKER ARM	2		
5	79912121A	SPRING, ROCKER ARM AXLE	2		
6	821Z0011B	ROCKER ARM PIN	4		
7	064770010	WASHER, THRUST	4		
8	66910011E	C RING	4		
9	209Z0011A	CLOSE ROCKER ARM	2		
10	76440572A	SEAL VALVE STEM	2		
11	79915021A	SPRING, CLOSING ROCKER ARM	2		
12	30124421AB	COMPLETE VERTICAL HEAD	1		
13	30310681AA	GUIDE, VALVE +0.03 MM	2		
	30310681AB	GUIDE, VALVE +0.06 MM	2		
	30310681AC	GUIDE, VALVE +0.09 MM	2		
14	30410901A	SEAT, INTAKE VALVE	1		
	30410901AB	SEAT, INLET VALVE +0.03 MM	1		

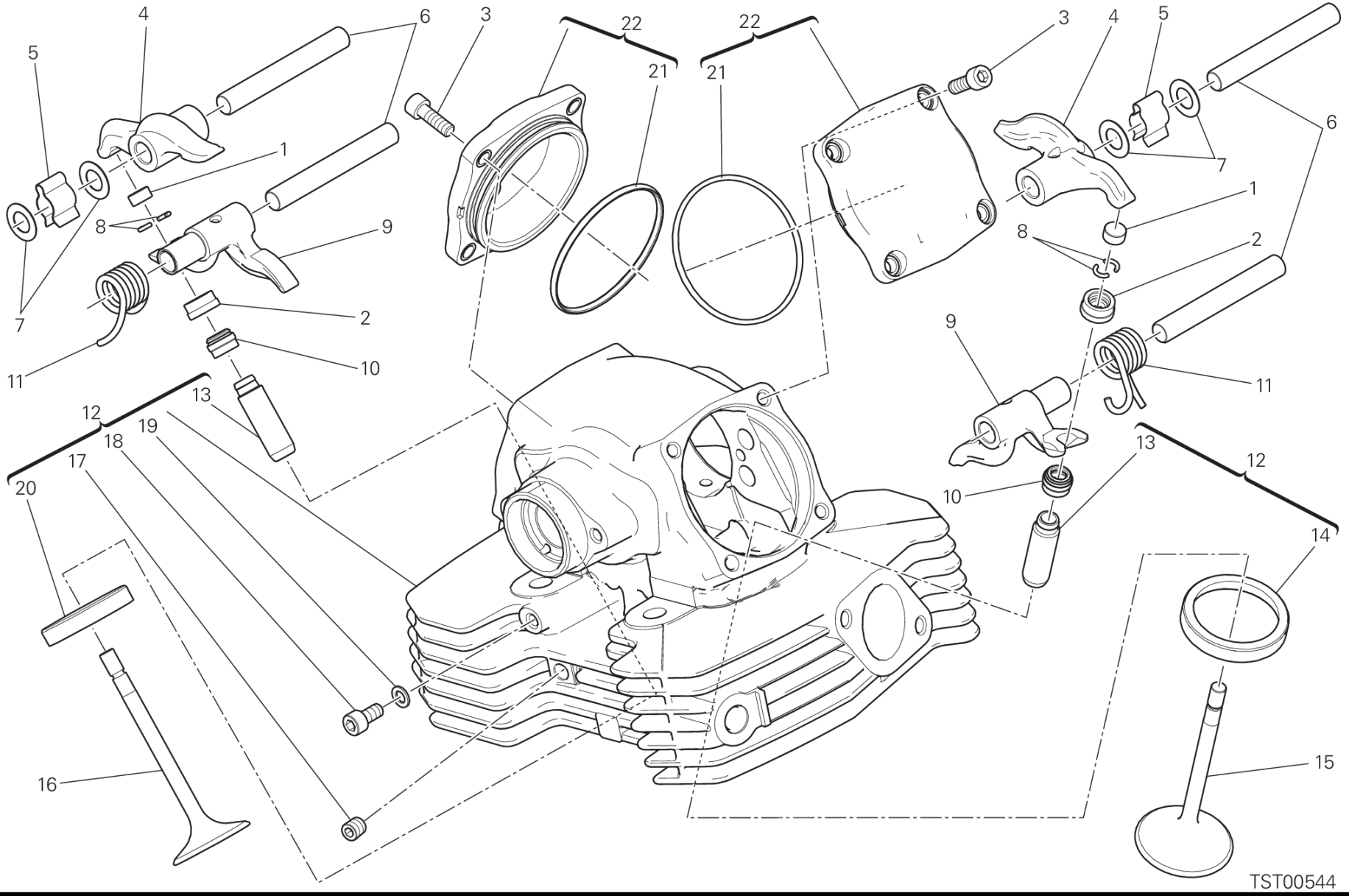
TST00544

POS.	CODE	DESCRIPTION	QTY	VALIDITY	NOTES
	30410901AC	SEAT, INLET VALVE +0.06 MM	1		
15	21010881A	INTAKE VALVE	1		
16	21110881A	EXHAUST VALVE	1		
17	78010871A	THREADED DOWEL	1		
18	77911331A	SCREW, SPECIAL TCEI M6X12	1		
19	85250231A	GASKET	1		
20	30410911A	SEAT, EXHAUST VALVE	1		
	30410911AB	SEAT, EXHAUST VALVE +0.03 MM	1		
	30410911AC	SEAT, EXHAUST VALVE +0.06 MM	1		
21	88641381A	O-RING 63.13X2.62	2		
22	24020393A	VALVE COVER	2		

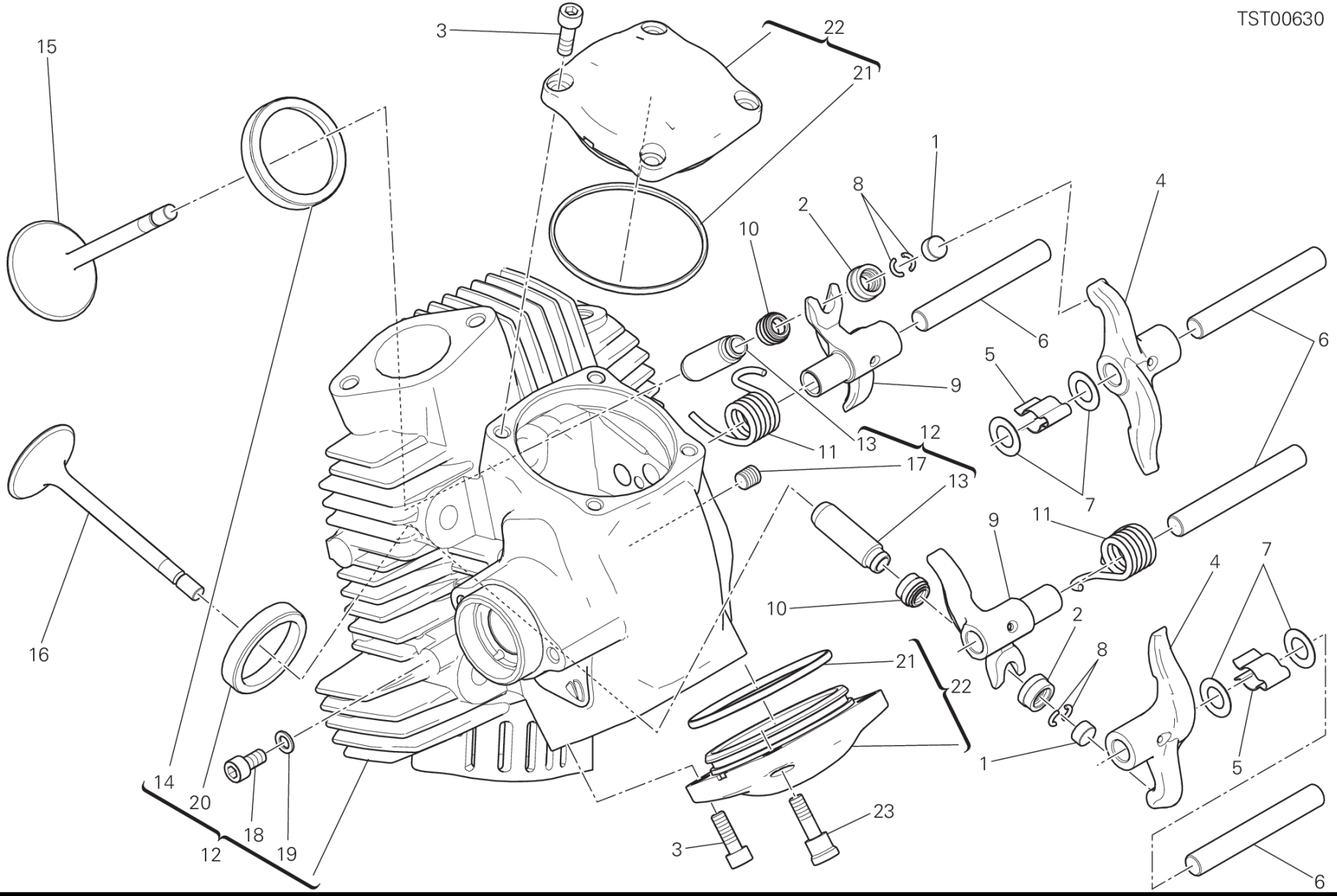
TST00630
3
22
21
15
1
8
2
10
4
6
5
9
12
11
13
17
7
16
14
20
18
19
12
23

POS.	CODE	DESCRIPTION	QTY	VALIDITY	NOTES
1	84010012A	ADJUSTER, OPENING ROCKER ARM 2.00 MM	2		
	84010022A	ADJUSTER, OPENING ROCKER ARM 2.05 MM	2		
	84010032A	ADJUSTER, OPENING ROCKER ARM 2.10 MM	2		
	84010042A	ADJUSTER, OPENING ROCKER ARM 2.15 MM	2		
	84010052A	ADJUSTER, OPENING ROCKER ARM 2.20 MM	2		
	84010062A	ADJUSTER, OPENING ROCKER ARM 2.25 MM	2		
	84010072A	ADJUSTER, OPENING ROCKER ARM 2.30 MM	2		
	84010082A	ADJUSTER, OPENING ROCKER ARM 2.35 MM	2		
	84010092A	ADJUSTER, OPENING ROCKER ARM 2.40 MM	2		
	84010102A	ADJUSTER, OPENING ROCKER ARM 2.45 MM	2		
	84010112A	ADJUSTER, OPENING ROCKER ARM 2.50 MM	2		
	84010122A	ADJUSTER, OPENING ROCKER ARM 2.55 MM	2		
	84010132A	ADJUSTER, OPENING ROCKER ARM 2.60 MM	2		
	84010142A	ADJUSTER, OPENING ROCKER ARM 2.65 MM	2		
	84010152A	ADJUSTER, OPENING ROCKER ARM 2.70 MM	2		
	84010162A	ADJUSTER, OPENING ROCKER ARM 2.75 MM	2		
	84010172A	ADJUSTER, OPENING ROCKER ARM 2.80 MM	2		
	84010182A	ADJUSTER, OPENING ROCKER ARM 2.85 MM	2		
	84010192A	ADJUSTER, OPENING ROCKER ARM 2.90 MM	2		
	84010202A	ADJUSTER, OPENING ROCKER ARM 2.95 MM	2		
	84010212A	ADJUSTER, OPENING ROCKER ARM 3.00 MM	2		
	84010222A	ADJUSTER, OPENING ROCKER ARM 3.05 MM	2		
	84010232A	ADJUSTER, OPENING ROCKER ARM 3.10 MM	2		
	84010242A	ADJUSTER, OPENING ROCKER ARM 3.15 MM	2		
	84010252A	ADJUSTER, OPENING ROCKER ARM 3.20 MM	2		
	84010262A	ADJUSTER, OPENING ROCKER ARM 3.25 MM	2		
	84010272A	ADJUSTER, OPENING ROCKER ARM 3.30 MM	2		
	84010282A	ADJUSTER, OPENING ROCKER ARM 3.35 MM	2		
	84010292A	ADJUSTER, OPENING ROCKER ARM 3.40 MM	2		
	84010302A	ADJUSTER, OPENING ROCKER ARM 3.45 MM	2		
	84010312A	ADJUSTER, OPENING ROCKER ARM 1.80 MM	2		
	84010322A	ADJUSTER, OPENING ROCKER ARM 1.85 MM	2		
	84010332A	ADJUSTER, OPENING ROCKER ARM 1.90 MM	2		
	84010342A	ADJUSTER, OPENING ROCKER ARM 1.95 MM	2		
	84010722A	ADJUSTER, OPENING ROCKER ARM 3.60 MM	2		

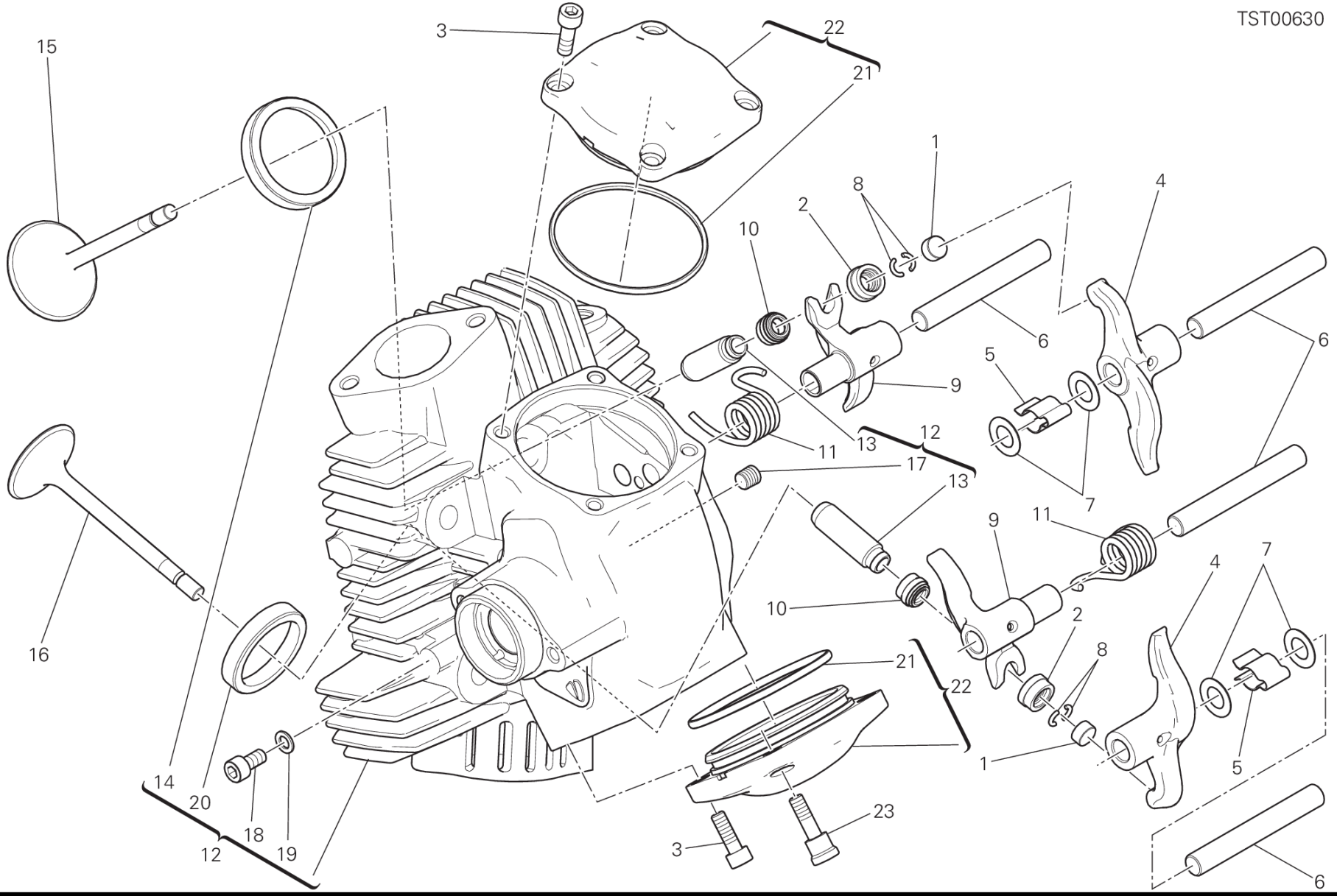
TST00630
3
22
21
15
1
8
2
10
4
6
5
9
12
11
13
17
7
16
14
20
18
19
12
23

POS.	CODE	DESCRIPTION	QTY	VALIDITY	NOTES
	84010732A	ADJUSTER, OPENING ROCKER ARM 3.80 MM	2		
	84011082A	ADJUSTER, OPENING ROCKER ARM 3.50 MM	2		
	84011092A	ADJUSTER, OPENING ROCKER ARM 3.55 MM	2		
	84011102A	ADJUSTER, OPENING ROCKER ARM 3.65 MM	2		
	84011112A	ADJUSTER, OPENING ROCKER ARM 3.70 MM	2		
	84011122A	ADJUSTER, OPENING ROCKER ARM 3.75 MM	2		
	84011132A	ADJUSTER, OPENING ROCKER ARM 3.85 MM	2		
	84011142A	ADJUSTER, OPENING ROCKER ARM 3.9 MM	2		
2	84010412B	ADJUSTER, CLOSING ROCKER ARM 2.20 MM	2		
	84010422B	ADJUSTER, CLOSING ROCKER ARM 2.25 MM	2		
	84010432B	ADJUSTER, CLOSING ROCKER ARM 2.30 MM	2		
	84010442B	ADJUSTER, CLOSING ROCKER ARM 2.35 MM	2		
	84010452B	ADJUSTER, CLOSING ROCKER ARM 2.40 MM	2		
	84010462B	ADJUSTER, CLOSING ROCKER ARM 2.45 MM	2		
	84010472B	ADJUSTER, CLOSING ROCKER ARM 2.50 MM	2		
	84010482B	ADJUSTER, CLOSING ROCKER ARM 2.55 MM	2		
	84010492B	ADJUSTER, CLOSING ROCKER ARM 2.60 MM	2		
	84010502B	ADJUSTER, CLOSING ROCKER ARM 2.65 MM	2		
	84010512B	ADJUSTER, CLOSING ROCKER ARM 2.70 MM	2		
	84010522B	ADJUSTER, CLOSING ROCKER ARM 2.75 MM	2		
	84010532B	ADJUSTER, CLOSING ROCKER ARM 2.80 MM	2		
	84010542B	ADJUSTER, CLOSING ROCKER ARM 2.85 MM	2		
	84010552B	ADJUSTER, CLOSING ROCKER ARM 2.90 MM	2		
	84010562B	ADJUSTER, CLOSING ROCKER ARM 2.95 MM	2		
	84010572B	ADJUSTER, CLOSING ROCKER ARM 3.00 MM	2		
	84010582B	ADJUSTER, CLOSING ROCKER ARM 3.05 MM	2		
	84010592B	ADJUSTER, CLOSING ROCKER ARM 3.10 MM	2		
	84010602B	ADJUSTER, CLOSING ROCKER ARM 3.15 MM	2		
	84010612B	ADJUSTER, CLOSING ROCKER ARM 3.20 MM	2		
	84010622B	ADJUSTER, CLOSING ROCKER ARM 3.25 MM	2		
	84010632B	ADJUSTER, CLOSING ROCKER ARM 3.30 MM	2		
	84010642B	ADJUSTER, CLOSING ROCKER ARM 3.35 MM	2		
	84010652B	ADJUSTER, CLOSING ROCKER ARM 3.40 MM	2		
	84010662B	ADJUSTER, CLOSING ROCKER ARM 3.45 MM	2		
	84010672B	ADJUSTER, CLOSING ROCKER ARM 3.50 MM	2		

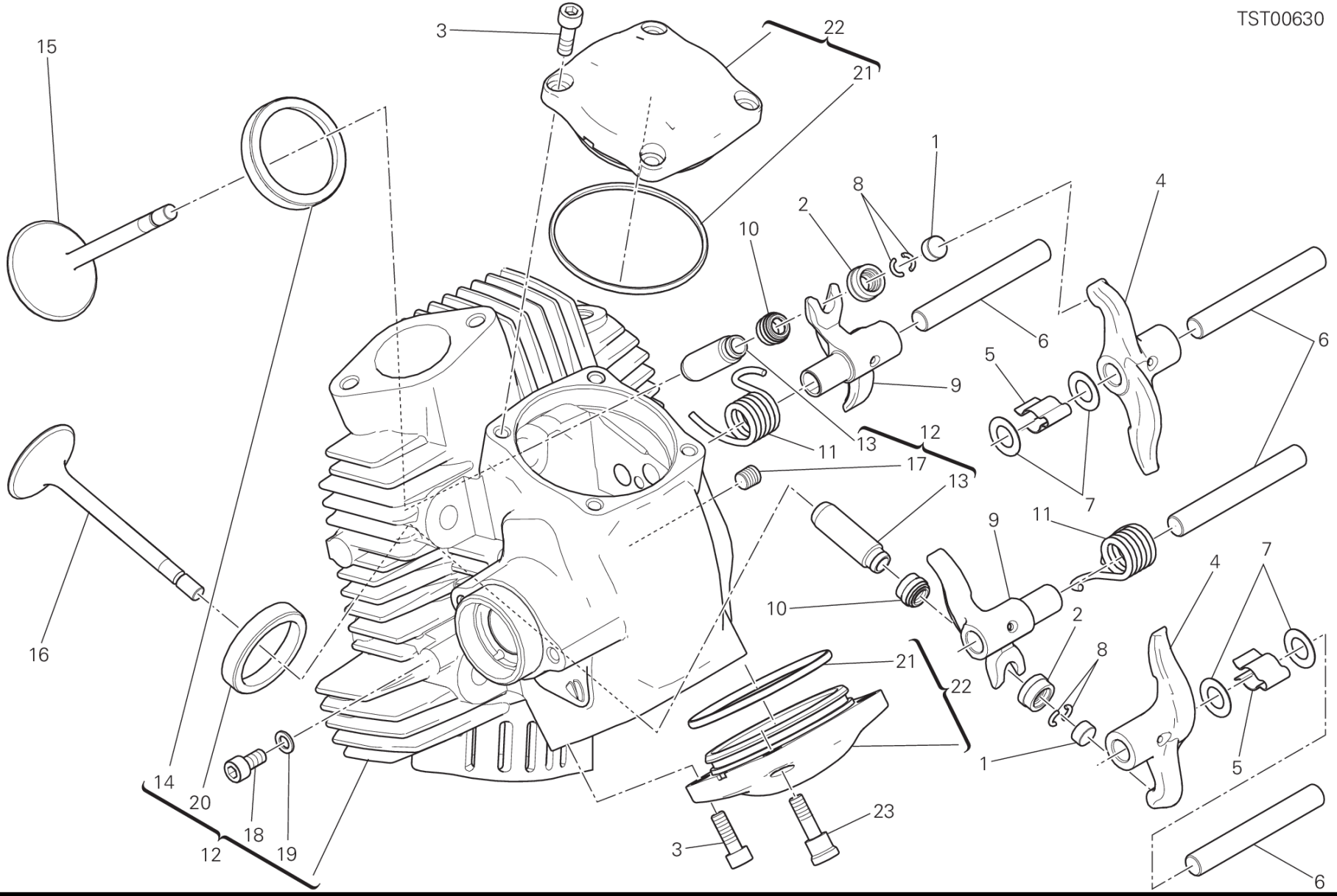
TST00630
3
22
21
15
1
8
2
10
4
6
5
9
12
11
13
17
7
16
14
20
18
19
12
23
3

POS.	CODE	DESCRIPTION	QTY	VALIDITY	NOTES
	84010682B	ADJUSTER, CLOSING ROCKER ARM 3.55 MM	2		
	84010692B	ADJUSTER, CLOSING ROCKER ARM 3.60 MM	2		
	84010702B	ADJUSTER, CLOSING ROCKER ARM 3.65 MM	2		
	84010712B	ADJUSTER, CLOSING ROCKER ARM 3.70 MM	2		
	84010722B	ADJUSTER, CLOSING ROCKER ARM 3.75 MM	2		
	84010732B	ADJUSTER, CLOSING ROCKER ARM 3.80 MM	2		
	84010742B	ADJUSTER, CLOSING ROCKER ARM 3.85 MM	2		
	84010752B	ADJUSTER, CLOSING ROCKER ARM 3.90 MM	2		
	84010762B	ADJUSTER, CLOSING ROCKER ARM 3.95 MM	2		
	84010772B	ADJUSTER, CLOSING ROCKER ARM 4.00 MM	2		
	84010782B	ADJUSTER, CLOSING ROCKER ARM 4.05 MM	2		
	84010792B	ADJUSTER, CLOSING ROCKER ARM 4.10 MM	2		
	84010802B	ADJUSTER, CLOSING ROCKER ARM 4.15 MM	2		
	84010812B	ADJUSTER, CLOSING ROCKER ARM 4.20 MM	2		
	84010822B	ADJUSTER, CLOSING ROCKER ARM 4.25 MM	2		
	84010832B	ADJUSTER, CLOSING ROCKER ARM 4.30 MM	2		
	84010842B	ADJUSTER, CLOSING ROCKER ARM 4.35 MM	2		
	84010852B	ADJUSTER, CLOSING ROCKER ARM 4.40 MM	2		
	84010862B	ADJUSTER, CLOSING ROCKER ARM 4.45 MM	2		
	84010872B	ADJUSTER, CLOSING ROCKER ARM 4.50 MM	2		
3	77150668BA	SCREW M6X18	7		
4	208Z0011A	OPEN. ROCKER ARM	2		
5	79912121A	SPRING, ROCKER ARM AXLE	2		
6	821Z0011B	ROCKER ARM PIN	4		
7	064770010	WASHER, THRUST	4		
8	66910011E	C RING	4		
9	209Z0011A	CLOSE ROCKER ARM	2		
10	76440572A	SEAL VALVE STEM	2		
11	79915021A	SPRING, CLOSING ROCKER ARM	2		
12	30124411AB	COMPLETE HORIZONTAL HEAD	1		
13	30310681AA	GUIDE, VALVE +0.03 MM	2		
	30310681AB	GUIDE, VALVE +0.06 MM	2		
	30310681AC	GUIDE, VALVE +0.09 MM	2		
14	30410901A	SEAT, INTAKE VALVE	1		
	30410901AB	SEAT, INLET VALVE +0.03 MM	1		

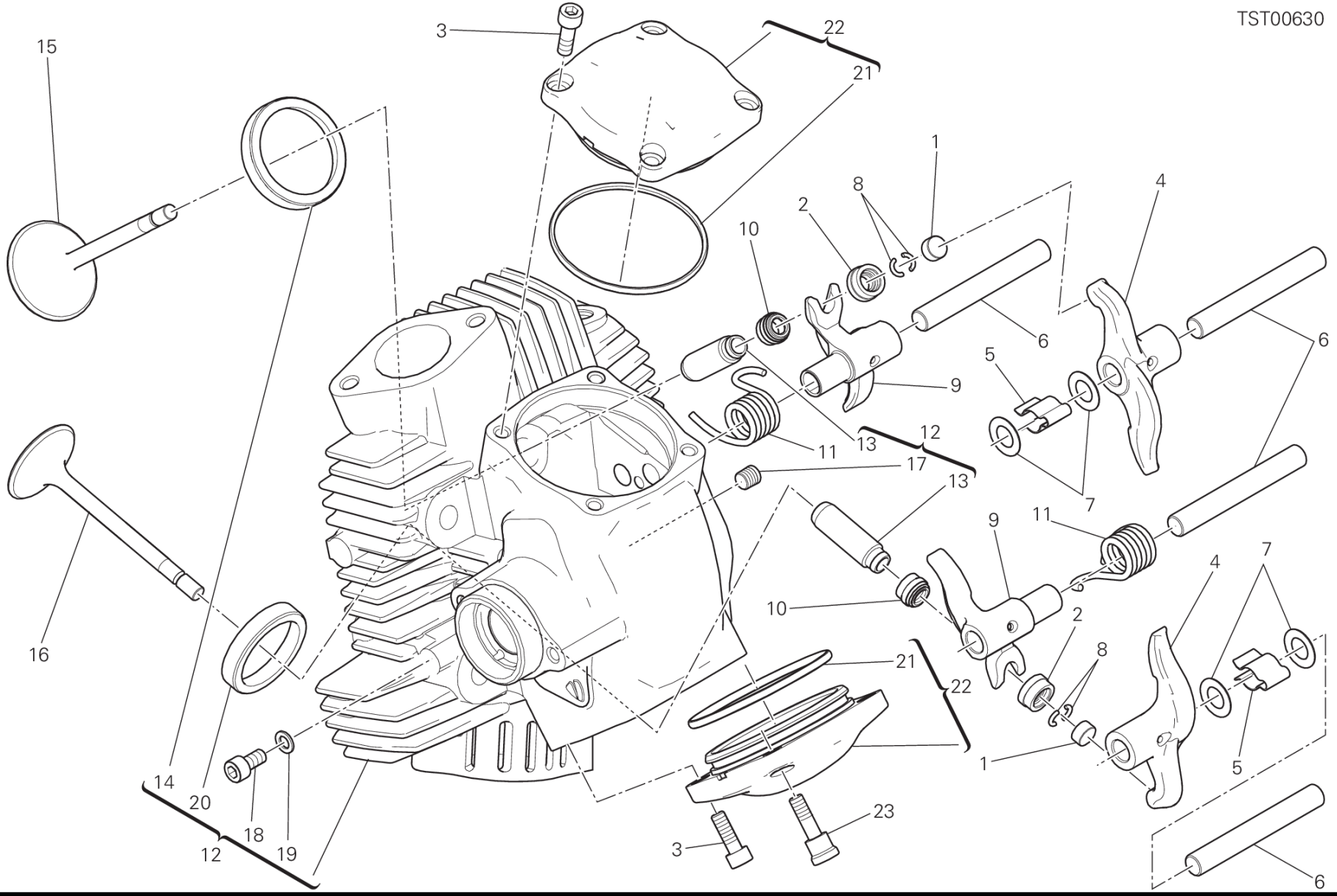
TST00630
3
22
21
15
1
8
2
10
4
6
5
9
6
12
11
13
17
13
7
9
11
4
7
10
2
8
21
22
1
5
14
20
18
19
12
3
23
3
6

POS.	CODE	DESCRIPTION	QTY	VALIDITY	NOTES
	30410901AC	SEAT, INLET VALVE +0.06 MM	1		
15	21010881A	INTAKE VALVE	1		
16	21110881A	EXHAUST VALVE	1		
17	78010871A	THREADED DOWEL	1		
18	77911331A	SCREW, SPECIAL TCEI M6X12	1		
19	85250231A	GASKET	1		
20	30410911A	SEAT, EXHAUST VALVE	1		
	30410911AB	SEAT, EXHAUST VALVE +0.03 MM	1		
	30410911AC	SEAT, EXHAUST VALVE +0.06 MM	1		
21	88641381A	O-RING 63.13X2.62	2		
22	24020393A	VALVE COVER	2		
23	77919631A	SCREW, SPECIAL	1		

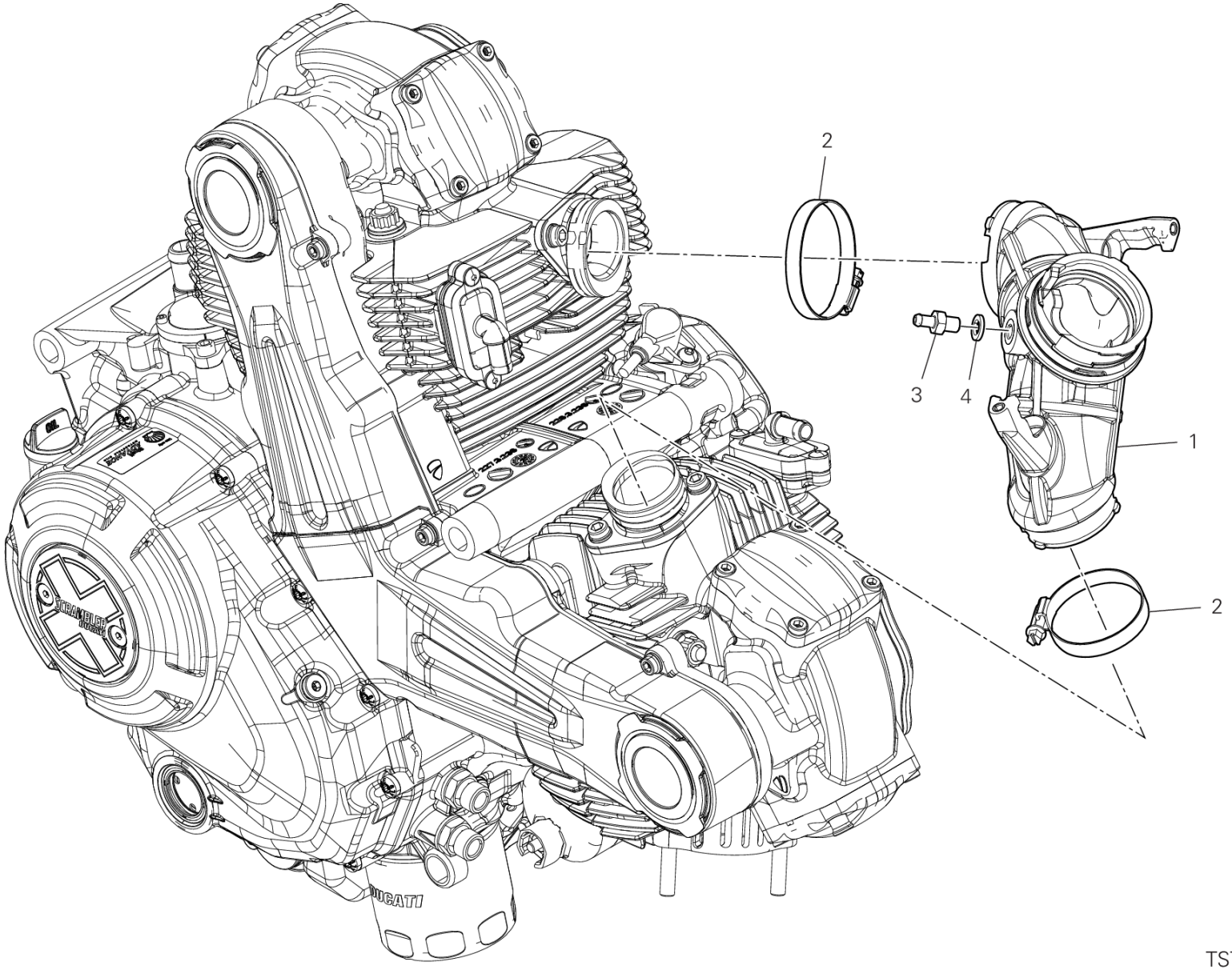

TST00714

DRAWING 11E - INTAKE MANIFOLD

GROUP ENGINE

POS.	CODE	DESCRIPTION	QTY	VALIDITY	NOTES
1	14010791B	INTAKE MANIFOLD	1		
2	74141801A	CLAMP 40-60 MM	2		
3	81416941A	UNION	1		
4	85212971A	COPPER GASKET	1		

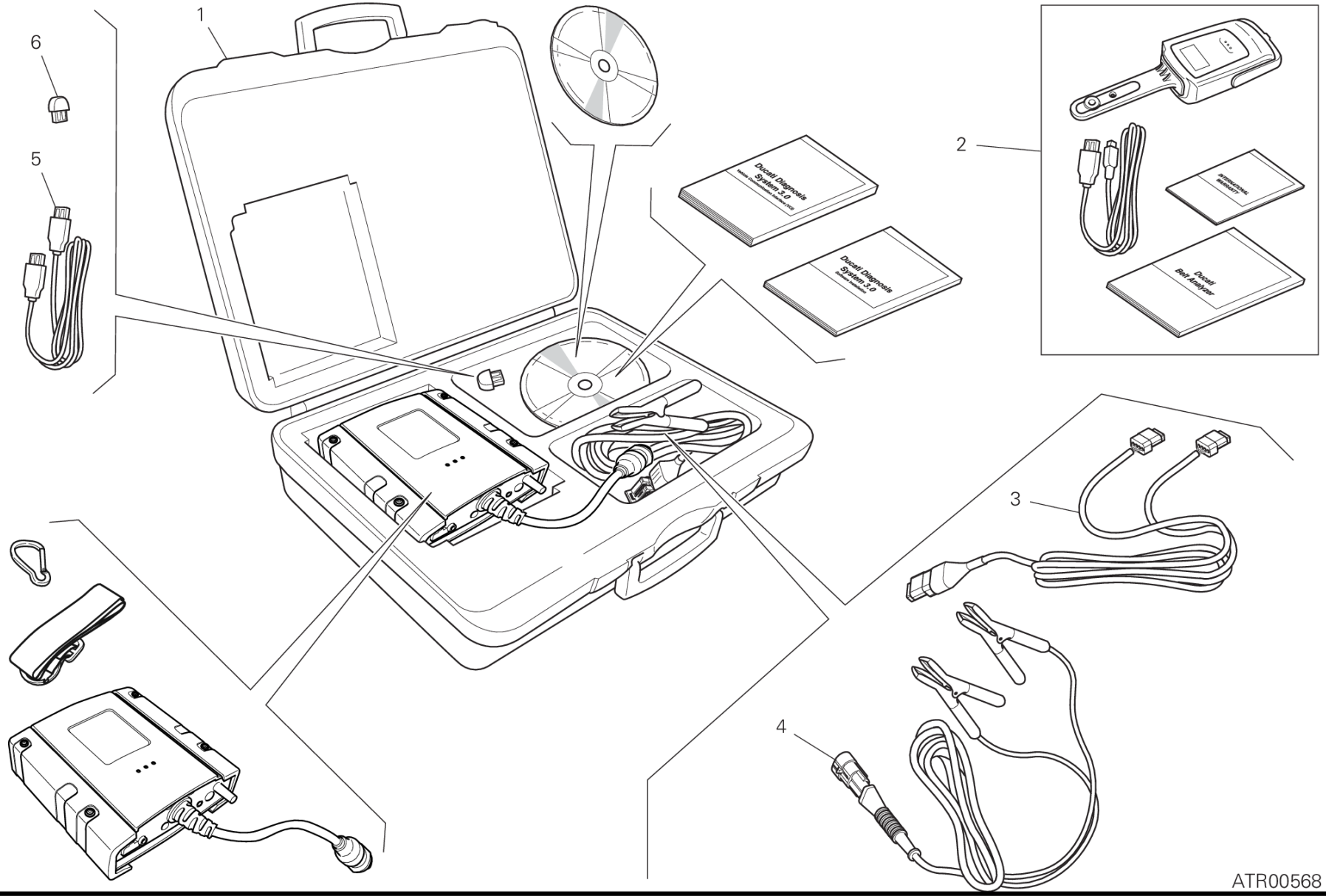
1
2
3
4
5
6
Ducati Diagnosis System 2.0
Ducati Diagnosis System 2.0
Ducati Bolt Analyzer
ATR00568

POS.	CODE	DESCRIPTION	QTY	VALIDITY	NOTES
1	979000279	DDS 3	1		
2	979000253	BELT TENSIONING KIT	1		
3	979000282	DIAGNOSIS CABLE	1		
4	979000283	CONNECTING CABLE	1		
5	979000284	USB CABLE	1		
6	979000281	HASP DDS3 KEY	1		

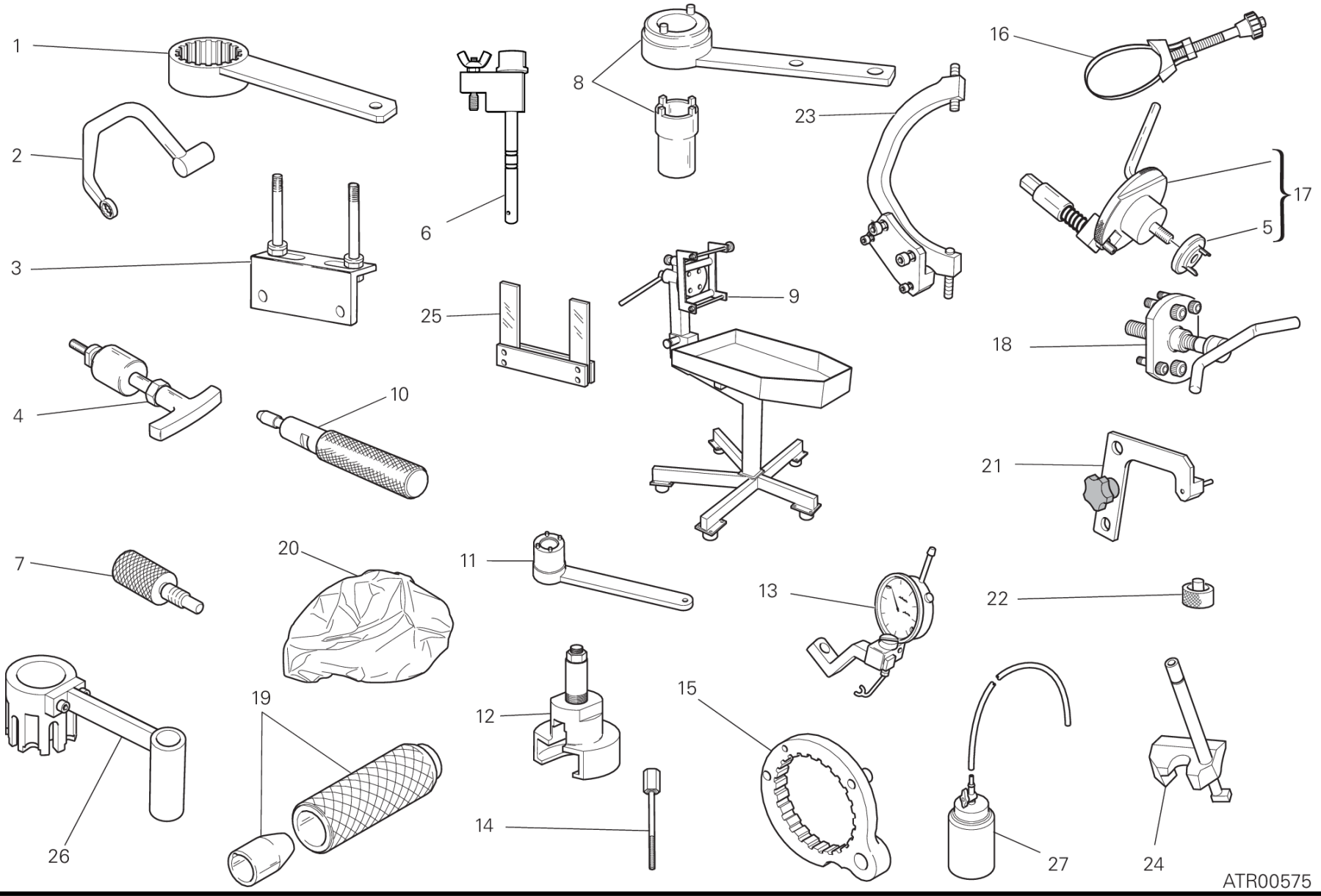
1
2
3
4
6
8
9
10
11
12
13
14
15
16
17
18
19
20
21
22
23
24
25
26
27
5
7
ATR00575

POS.	CODE	DESCRIPTION	QTY	VALIDITY	NOTES
1	887133218	WRENCH FOR HOLDING TIMING BELT ROLLERS	1		
2	887132676	HEAD NUTS HOLDER WRENCH	1		
3	887132103	HEAD MOUNTING BASE	1		
4	887131994	ROCKER PIN EXTRACTOR	1		
5	887134411	INSERT	1		
6	887132695	CLUTCH FLUID PRESSURE MEASURING TOOL	1		
7	887132282	BELT ROLLER TIMING OF TWO-VALVE HEAD	1		
8	887131805	DRIVING ROLLER TIGHTENING TOOL	1		
9	887131832	BENCH FOR ENGINE REPAIR	1		
10	887132442	TOOL, OIL SEAL MOUNTING	1		
11	887130137	CRANKSHAFT GEAR RETAINING WRENCH	1		
12	887134882	EXTRACTOR FOR PRIMARY DRIVE GEAR	1		
13	887651581	VALVE LIFT GAUGE	1		
14	887132591	CLUTCH SCREW	1		
15	887132556	WRENCH HOLD CLUCH HOUSING DRUM STEADY	1		
16	887132906	WRENCH, OIL FILTER CARTRIDGE	1		
17	887132011	CRANKSHAFT RESET TOOL	1		
18	887131749	DRIVE ROLLER PULLER	1		
19	887132834	TOOL SNAP RING INSTALLATION	1		
20	887131886	ENGINE CANVAS	1		
21	887133334	PLATE POSITIONING GEAR ENGAGEMENT FORK	1		
22	887651298	SPACER FOR CHECKING LOWER VALVE SHIM	1		
23	887133367	FLYWHEEL WRENCH	1		
24	887132916	CLOSING ROCKER & SPRING ASSEMBLING TOOL	1		
25	887651000	FORK FEELER GAUGE 0.1 MM	1		
	887651005	FORK FEELER GAUGE 0.2 MM	1		
	887651006	FORK FEELER GAUGE 0.3 MM	1		
26	887132801	REACTION TOOL FOR WET CLUTCH	1		
27	887138875	OIL BOTTLE	1		

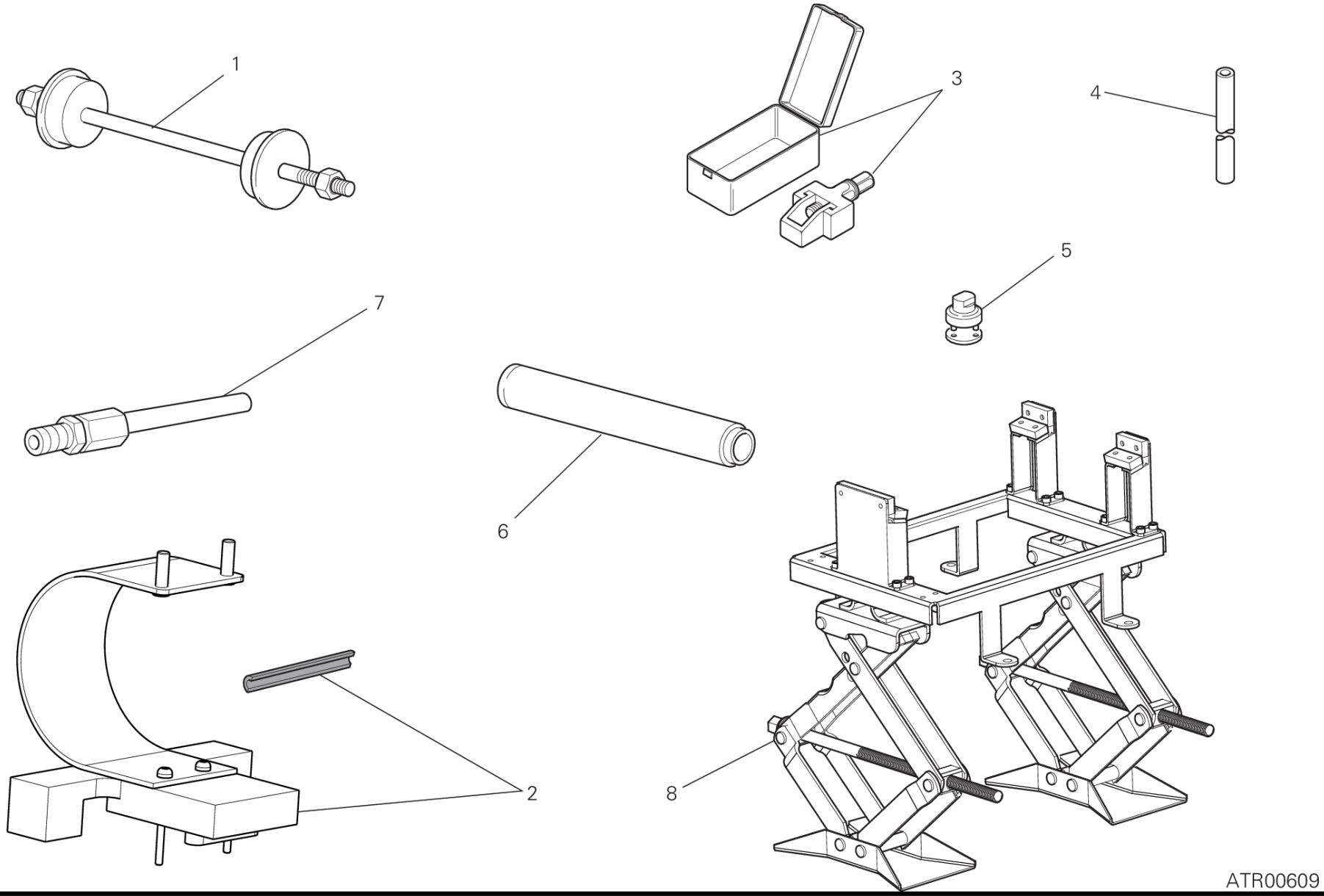
1
3
4
5
7
6
2
8
ATR00609

POS.	CODE	DESCRIPTION	QTY	VALIDITY	NOTES
1	887131062	TOOL ASSEMBLING STEERING TUBE BEARING	1		
2	887138835	BRACKET, FUEL TANK	1		
3	887132562	TOOL FOR ASSEMBLING CHAIN	1		
4	887130958	TRACTION BAR SHOWA FORKS OVERHAULING	1		
5	887131058	SPANNER TO ASSEMBLE THE STEERING SLEEVE	1		
6	887131072	DRIVING STOPPER FOR THE HALF BEARING	1		
7	887131010	CONNECTOR FOR EXHAUST GAS TAKE-UP POINT	1		
8	887138871	BENCH FOR ENGINE REPAIR	1		


SCORPION RALLY STR

POS.	CODE	DESCRIPTION	QTY	VALIDITY	NOTES
1	490PE333A	FRONT TYRE	1		(*)=Pneumatico di primo equipaggiamento
2	491PE336A	REAR TYRE	1		(*)=Pneumatico di primo equipaggiamento
3	490PE270A	FRONT TYRE	1		
4	491P0290A	REAR TYRE	1		
5	490PE323A	FRONT TYRE	1		
6	491PE327A	REAR TYRE	1		
7	490P0303A	FRONT TYRE	1		
8	491P0353A	REAR TYRE	1		


SCORPION RALLY STR

DRAWING B3 - (*) PIRELLI SCORPION™ RALLY STR

GROUP TYRES

POS.	CODE	DESCRIPTION	QTY	VALIDITY	NOTES
1	490PE333A	FRONT TYRE	1		(*)=Pneumatico di primo equipaggiamento
2	491PE336A	REAR TYRE	1		(*)=Pneumatico di primo equipaggiamento



POS.	CODE	DESCRIPTION	QTY	VALIDITY	NOTES
1	490P0270A	FRONT TYRE	1		
2	491P0290A	REAR TYRE	1		



DRAWING D2 - PIRELLI SCORPION™ RALLY

GROUP TYRES

POS.	CODE	DESCRIPTION	QTY	VALIDITY	NOTES
1	490PE323A	FRONT TYRE	1		
2	491PE327A	REAR TYRE	1		


GRAN TURISMO
GT
ANGEL GT II
120/70 ZR 17
180/55 ZR 17

POS.	CODE	DESCRIPTION	QTY	VALIDITY	NOTES
1	490P0303A	FRONT TYRE	1		
2	491P0353A	REAR TYRE	1		

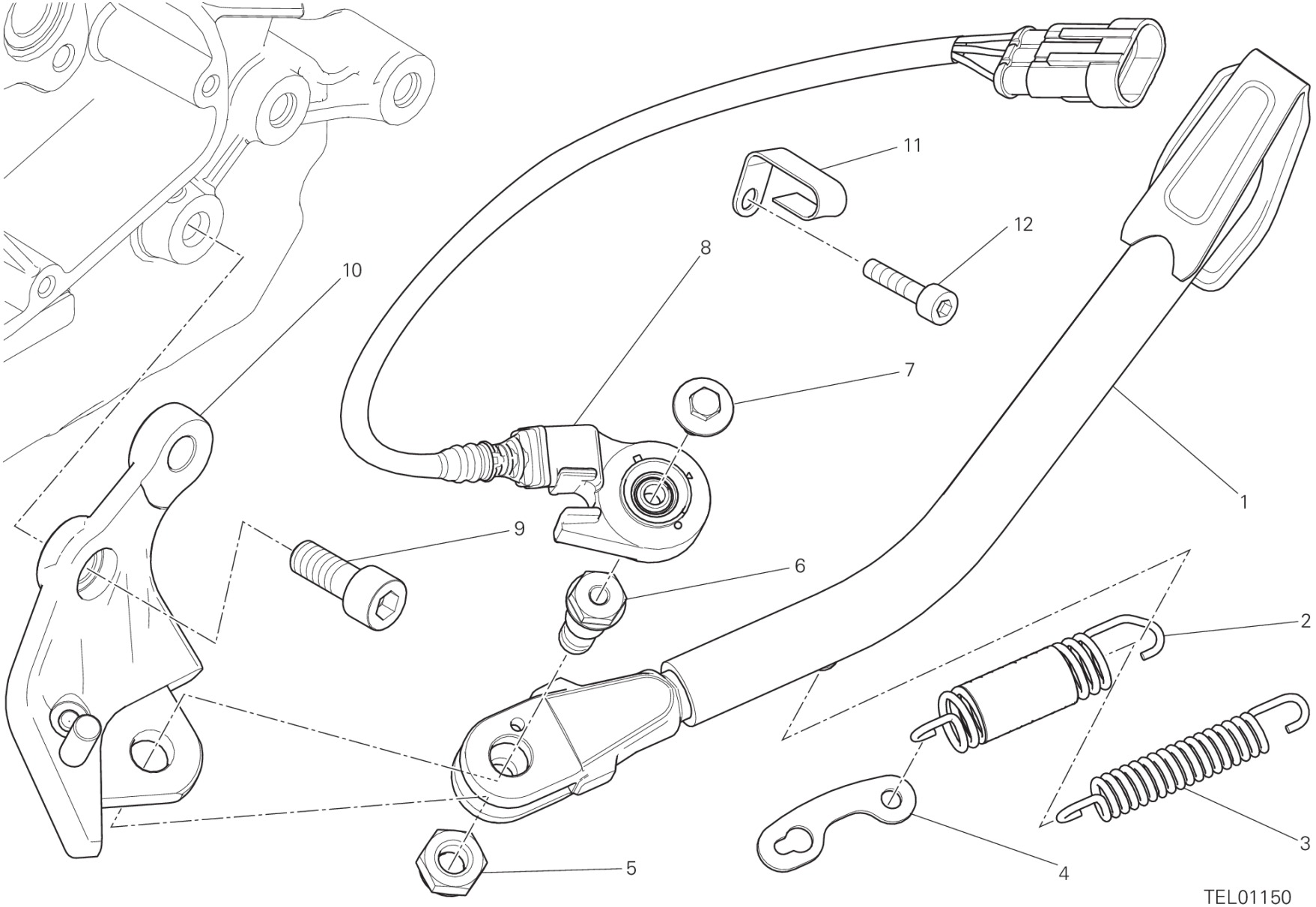
11
12
8
10
7
1
9
6
2
5
4
3
TEL01150

POS.	CODE	DESCRIPTION	QTY	VALIDITY	NOTES
1	55611091AA	SIDE STAND	1		
2	79920881C	COMPLETE SPRING	1		
3	79915571AA	INNER SPRING	1		
4	82716371AA	LINK, SIDE STAND	1		
5	74910031AA	NUT	1		
6	55610663AC	AXLE, SIDE STAND	1		
7	77917241AA	SCREW	1		
8	53910351A	SWITCH, STAND	1		
9	77110481A	SCREW TCEI M10X25	1		
10	55620881AA	BRACKET, SIDE STAND	1		
11	83014941B	CLAMP, WIRE	1		
12	77510511B	SCREW TBEI M5X10	1		

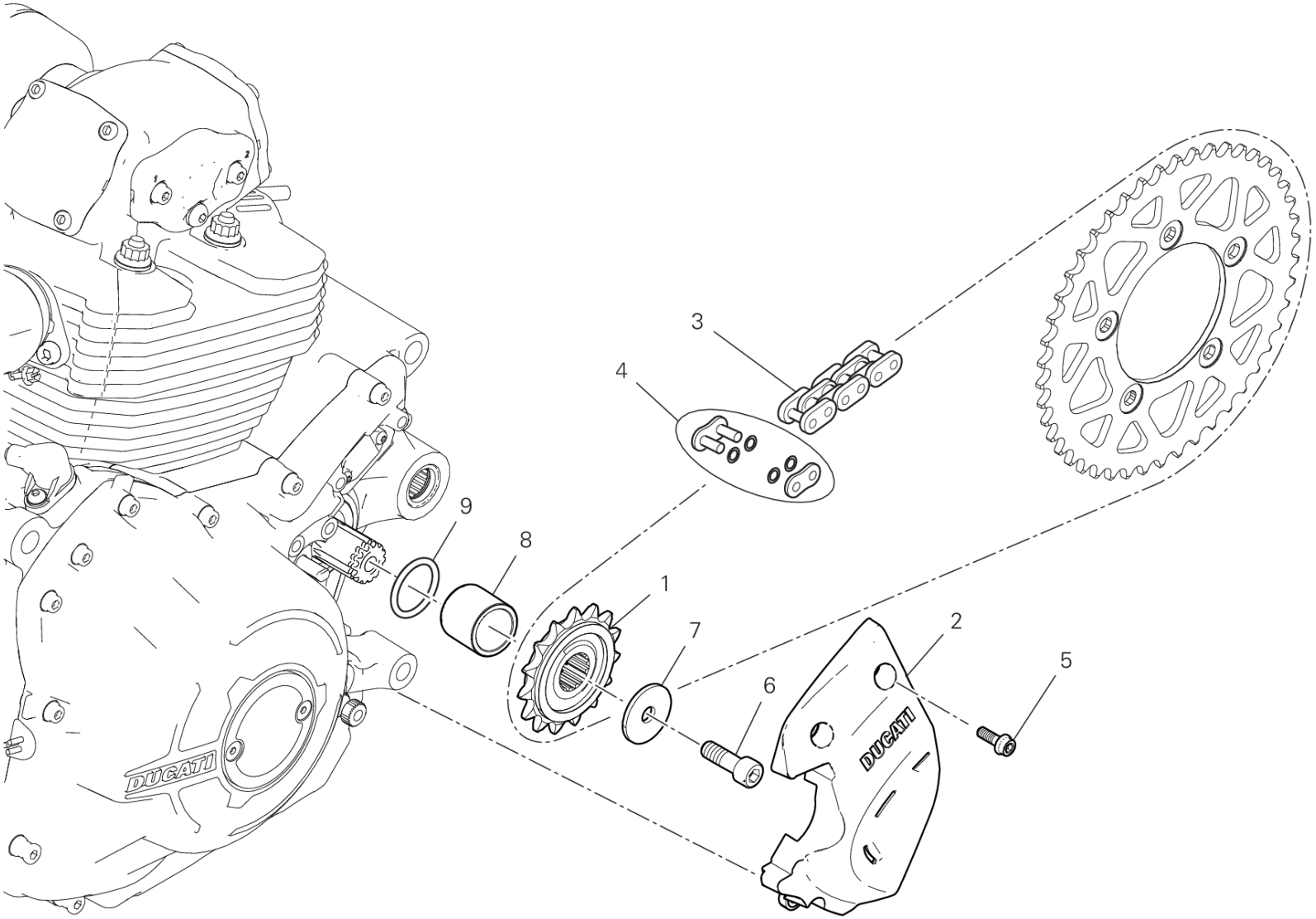

TEL01716

DRAWING 17A - FRONT SPROCKET - CHAIN

GROUP FRAME

POS.	CODE	DESCRIPTION	QTY	VALIDITY	NOTES
1	44910821A	SPROCKET T15	1		
2	4601G752A	CHAIN PINION COVER	1		
3	67641041A	CHAIN 103+1	1		
4	67740251A	CHAIN LINK	1		
5	77110391A	SCREW TCEIF M6X16	3		
6	77154337C	SCREW	1		
7	85212801A	THRUST WASHER	1		
8	7131E601A	SPACER	1		
9	88643251A	O-RING	1		

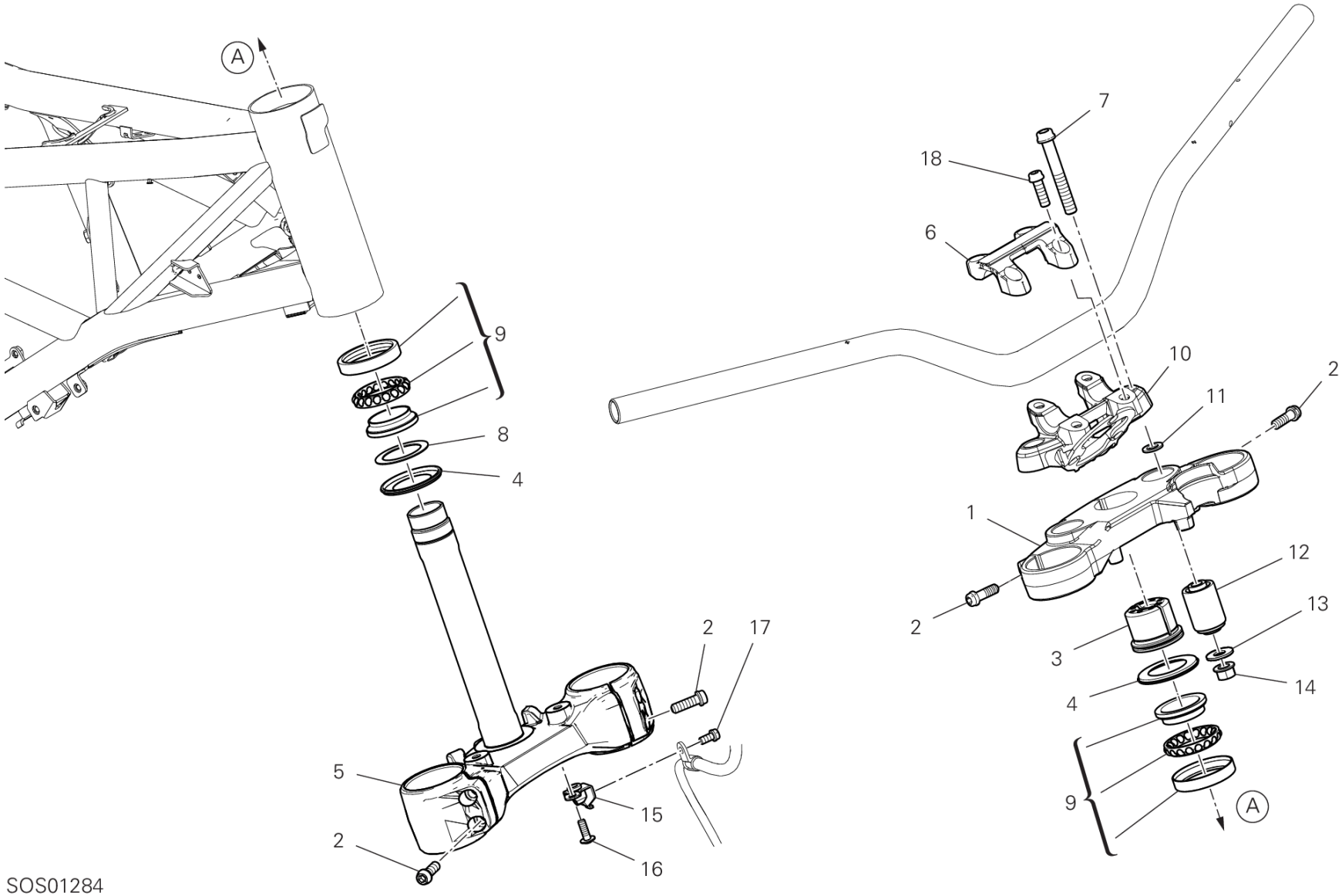

SOS01284

DRAWING 18A - STEERING ASSEMBLY

GROUP FRAME

POS.	CODE	DESCRIPTION	QTY	VALIDITY	NOTES
1	34111951AA	STEERING HEAD	1		
2	77157254B	SCREW	7		
3	70310131A	THREAD, STEERING HEAD TOP	1		
4	93010041B	SEAL RING	2		
5	34220891AB	STEERING HEAD BASE	1		
6	36016411AA	HANDLEBAR BRACKET, UPPER	1		
7	77159414B	SCREW	2		
8	85211031AB	WASHER	1		
9	70241232A	BEARING, STEERING NTN SF07A17P	2		
10	36016341AA	HOLDER, HANDLE LOWER	1		
11	85250401A	WASHER 10.5X18X1.6	2		
12	70011151A	VIBRATION DAMPER	2		
13	85210491B	WASHER 10.5X28X1.5	2		
14	74840241AB	NUT	2		
15	82718711AA	PLATE	1		
16	77210423C	SCREW TBEIF M6X16	2		
17	77156633B	SCREW	1		
18	77157278B	SCREW TCEIF M8X30	4		

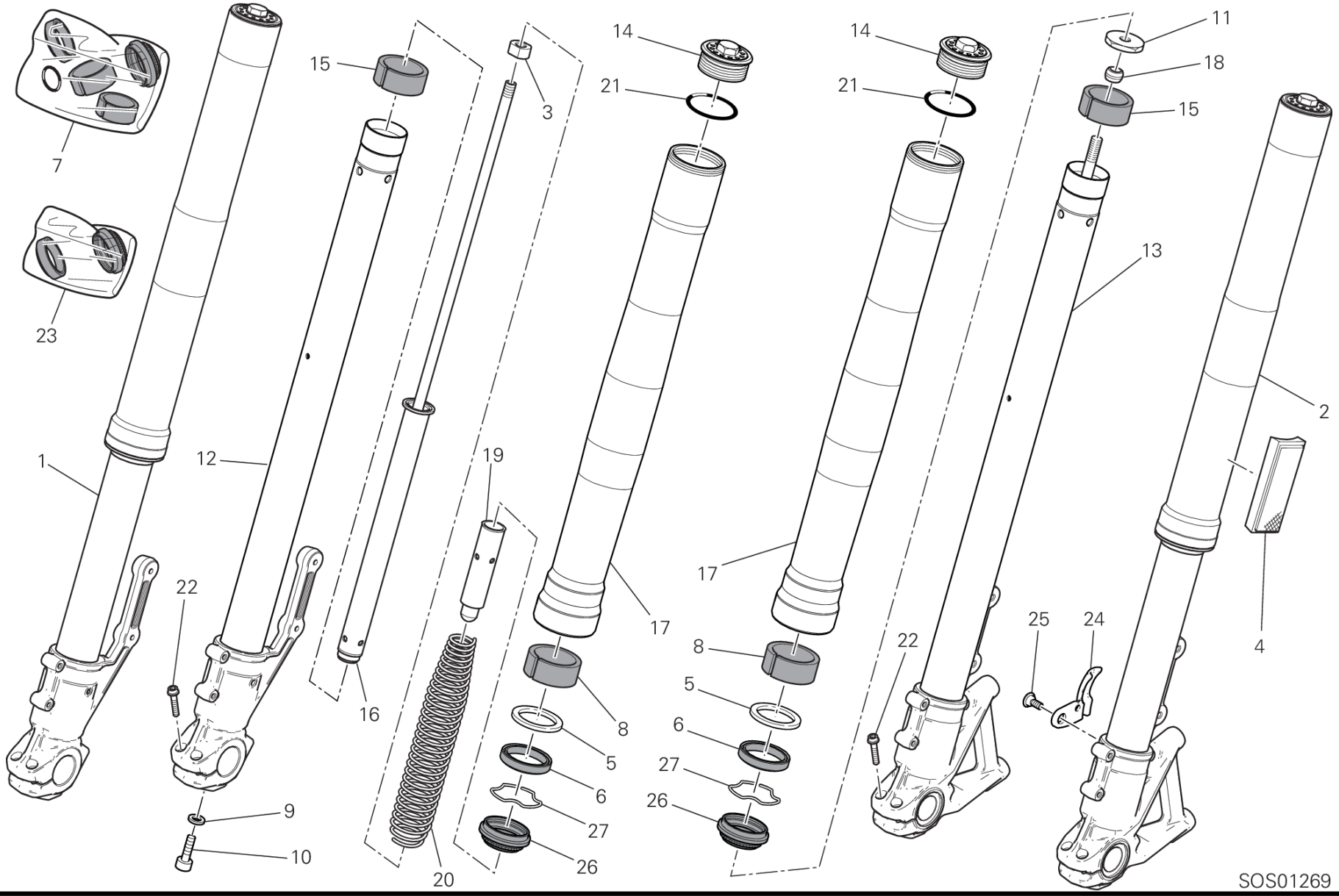
7
23
1
15
12
22
9
10
16
20
3
19
14
21
17
8
5
6
27
26
14
21
17
8
5
6
27
26
22
11
18
15
13
25
24
2
4
SOS01269

DRAWING 18B - FRONT FORK

GROUP FRAME

POS.	CODE	DESCRIPTION	QTY	VALIDITY	NOTES
1	34421401A	RIGHT FORK LEG ASSY	1		
2	34521401A	LEFT FORK LEG ASSY	1		
3	34913621A	NUT	1		
4	52910221A	REFLECTOR, ADHESIVE AMBER	2		
5	34914341A	WASHER	2		
6	34914351A	SEAL RING	2		
7	34921891A	OVERHAUL KIT	1		
8	34914331A	LOWER BUSH	2		
9	34913601A	WASHER	1		
10	34913611A	SCREW	1		
11	34913991A	NUT, SPECIAL	1		
12	34921871A	FORK BOTTOM END + SLEEVE UNIT (R.H.)	1		
13	34923301A	FORK BOTTOM END + SLEEVE UNIT (L.H.)	1		
14	34913661A	PLUG	2		
15	34914321A	UPPER BUSHING	2		
16	34914901A	PLUNGER ASSY	1		
17	34914381A	STANCHION TUBE	2		
18	34914001A	RUBBER PAD	1		
19	34914241A	PRELOAD TUBE	1		
20	34914891A	SPRING	1		
21	34913671A	O-RING	2		
22	77156694B	SCREW	4		
23	34921881A	SEAL KIT	1		
24	75810911A	FAIRLEAD	1		
25	77211221B	SCREW, SPECIAL	1		
26	34914371A	DUST COVER	2		
27	34914361A	STOP RING	2		

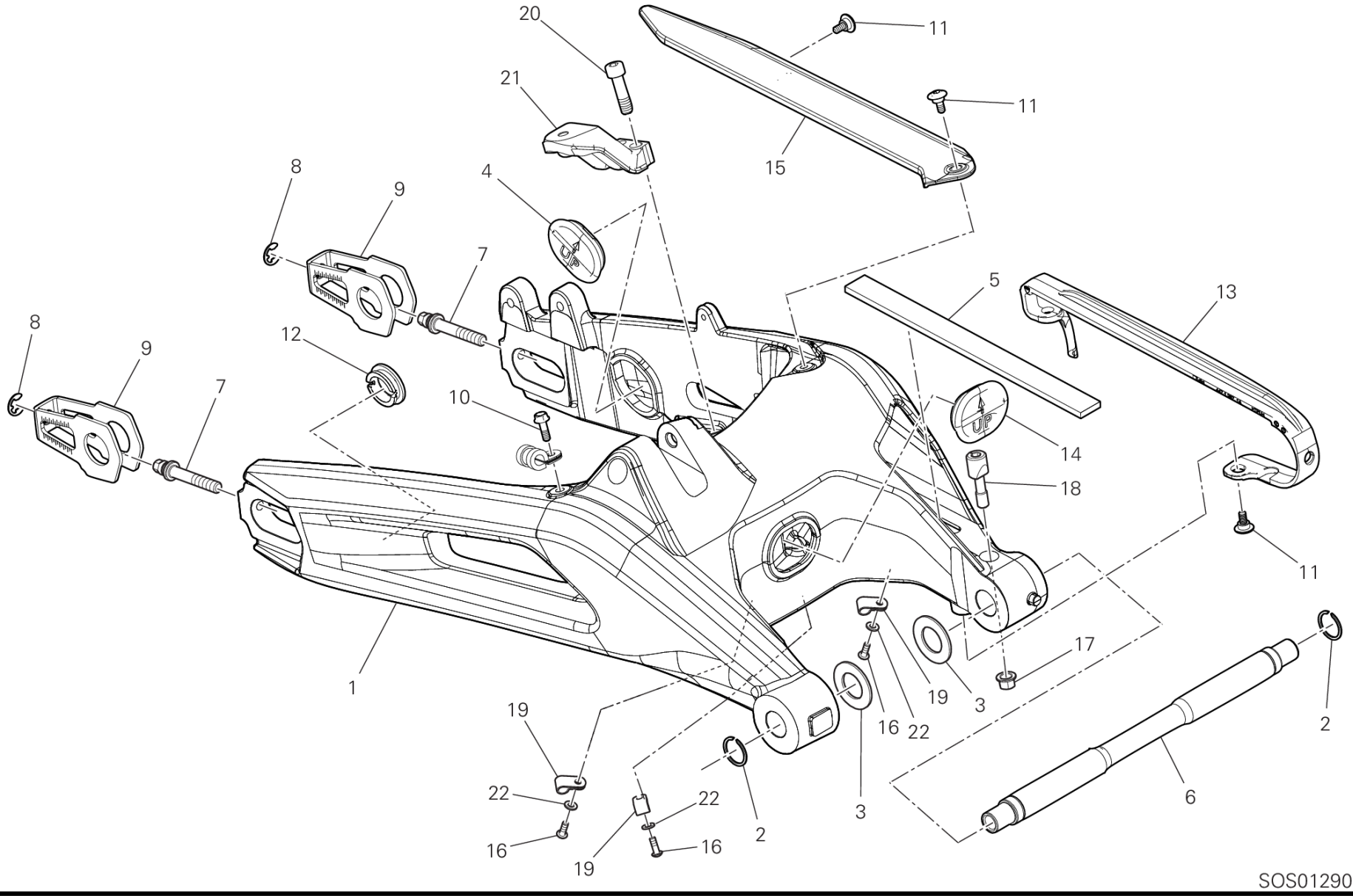
20
11
21
11
15
8
9
4
7
5
13
8
9
12
7
10
14
18
11
1
19
17
19
3
16
22
2
22
3
6
22
2
16
16
19
SOS01290

DRAWING 19A - REAR SWINGING ARM

GROUP FRAME

POS.	CODE	DESCRIPTION	QTY	VALIDITY	NOTES
1	37015192AA	REAR SWINGING ARM	1		
2	88440071A	SPRING RING	2		
3	85210011B	THRUST WASHER 20.5X36X1.8 MM	1		
	85210021B	THRUST WASHER 20.5X36X0.2 MM	4		
	85210031B	THRUST WASHER 20.5X36X0.1 MM	2		
	85214341A	WASHER, THRUST	1		
4	87211861A	CAP, SWINGARM COVER	1		
5	86613721A	ADHESIVE PAD	1		
6	36911571A	AXLE, REAR SWING ARM	1		
7	77915451B	SCREW	2		
8	88450341B	SPRING RING	2		
9	37310631A	PULLER, CHAIN	2		
10	77550213C	SCREW TBEI M6X16	1		
11	77214411BA	SCREW, SPECIAL	4		
12	87211871A	CAP, SWINGARM COVER	1		
13	44712671A	CHAIN SLIDER	1		
14	87210971A	CAP, SWINGARM COVER	1		
15	44610611A	CHAIN GUARD	1		
16	77240133C	SCREW TBEIF M4X12	3		
17	74840341B	NUT M8	1		
18	80810461A	CLAMP	1		
19	74141701A	PLATE	3		
20	7715727BF	SCREW	2		
21	8291P971AA		1		
22	85212511A	WASHER 4.5X9X0.5	3		

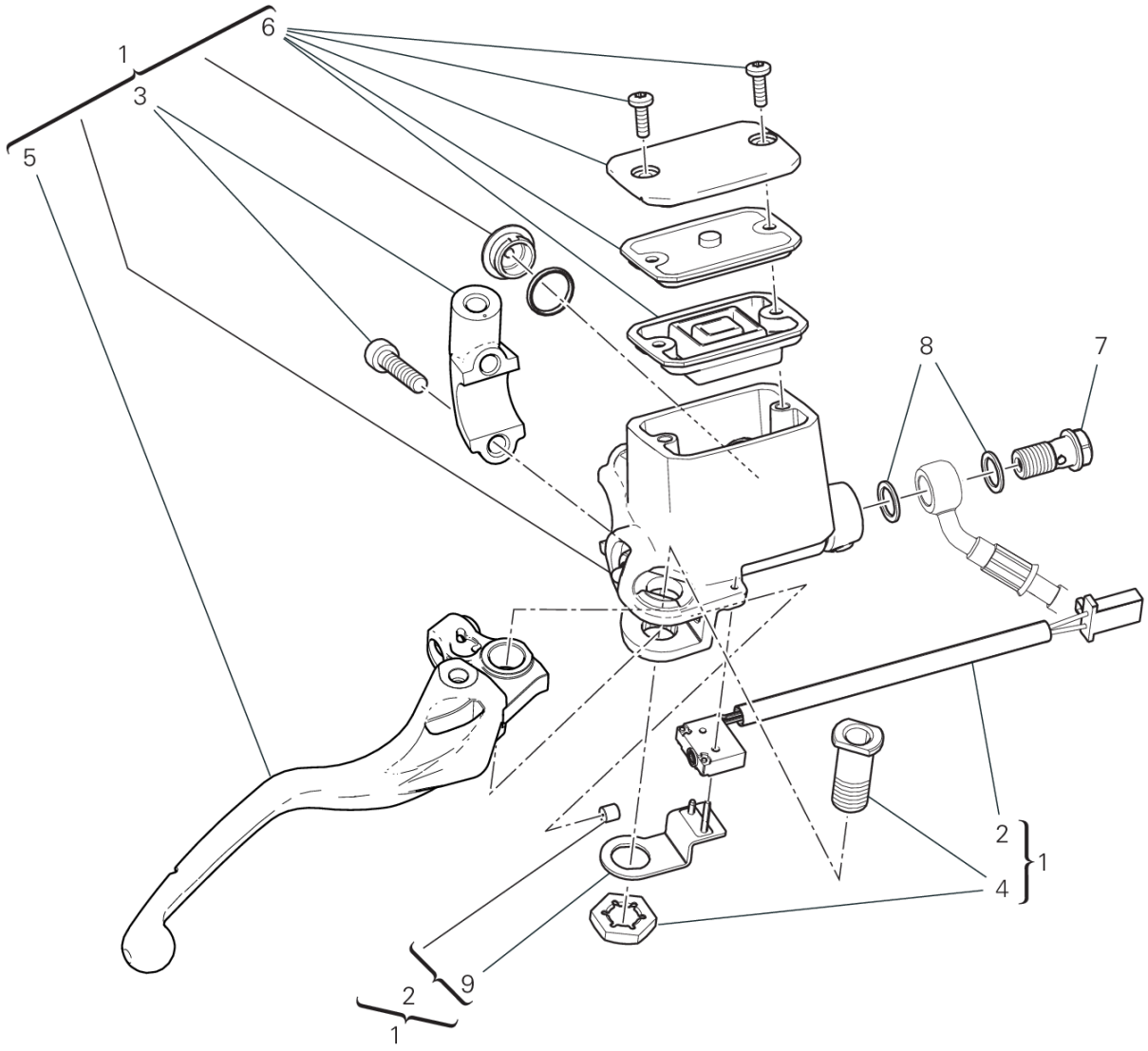

BRB00825

DRAWING 20A - FRONT BRAKE PUMP

GROUP FRAME

POS.	CODE	DESCRIPTION	QTY	VALIDITY	NOTES
1	62441501A	FRONT BRAKE PUMP	1		
2	53910751A	MICROSWITCH	1		
3	62640231A	U-BOLT KIT	1		
4	62640601A	BOLT, PIVOT	1		
5	63140591A	LEVER, FRONT BRAKE	1		
6	89340351A	PLUG ASSY	1		
7	77913662AB	SCREW, SPECIAL	1		
8	85250241A	WASHER 10X14X1	2		
9	58540271A	HOLDER	1		

BRB00667

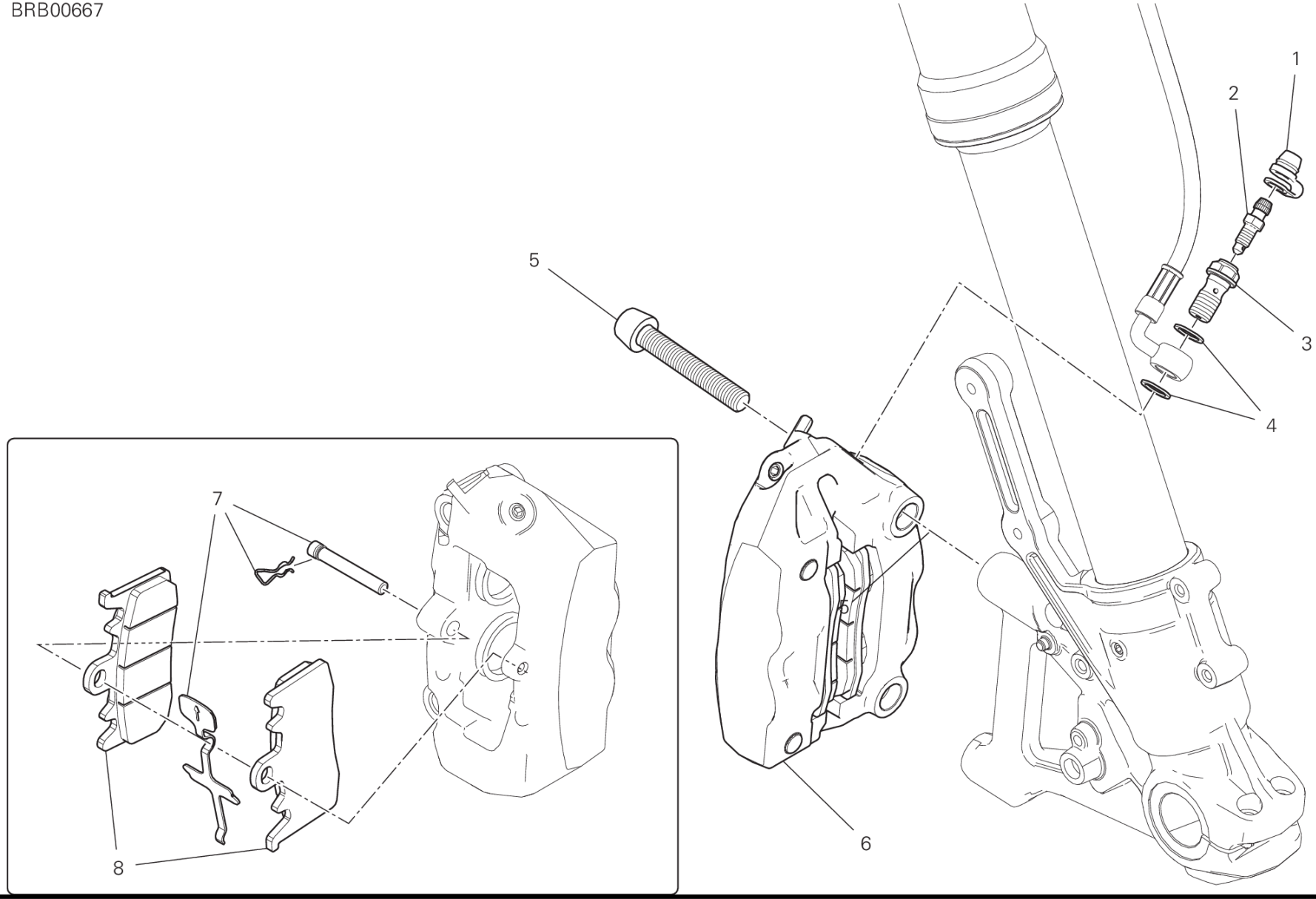

DRAWING 20B - FRONT BRAKE SYSTEM

GROUP FRAME

POS.	CODE	DESCRIPTION	QTY	VALIDITY	NOTES
1	61240052A	DUST COVER	1		
2	18710021A	VALVE, BREATHER	1		
3	77913971A	BOLT, BRAKE HOSE	1		
4	85250241A	WASHER 10X14X1	2		
5	77913311D	SCREW M 10 X 60	2		
6	61041292C	LEFT FRONT BRAKE CALIPER	1		
7	61240511A	SPARE PIN AND SPRING	1		
8	61341021A	FRONT BRAKE PADS SET	1		

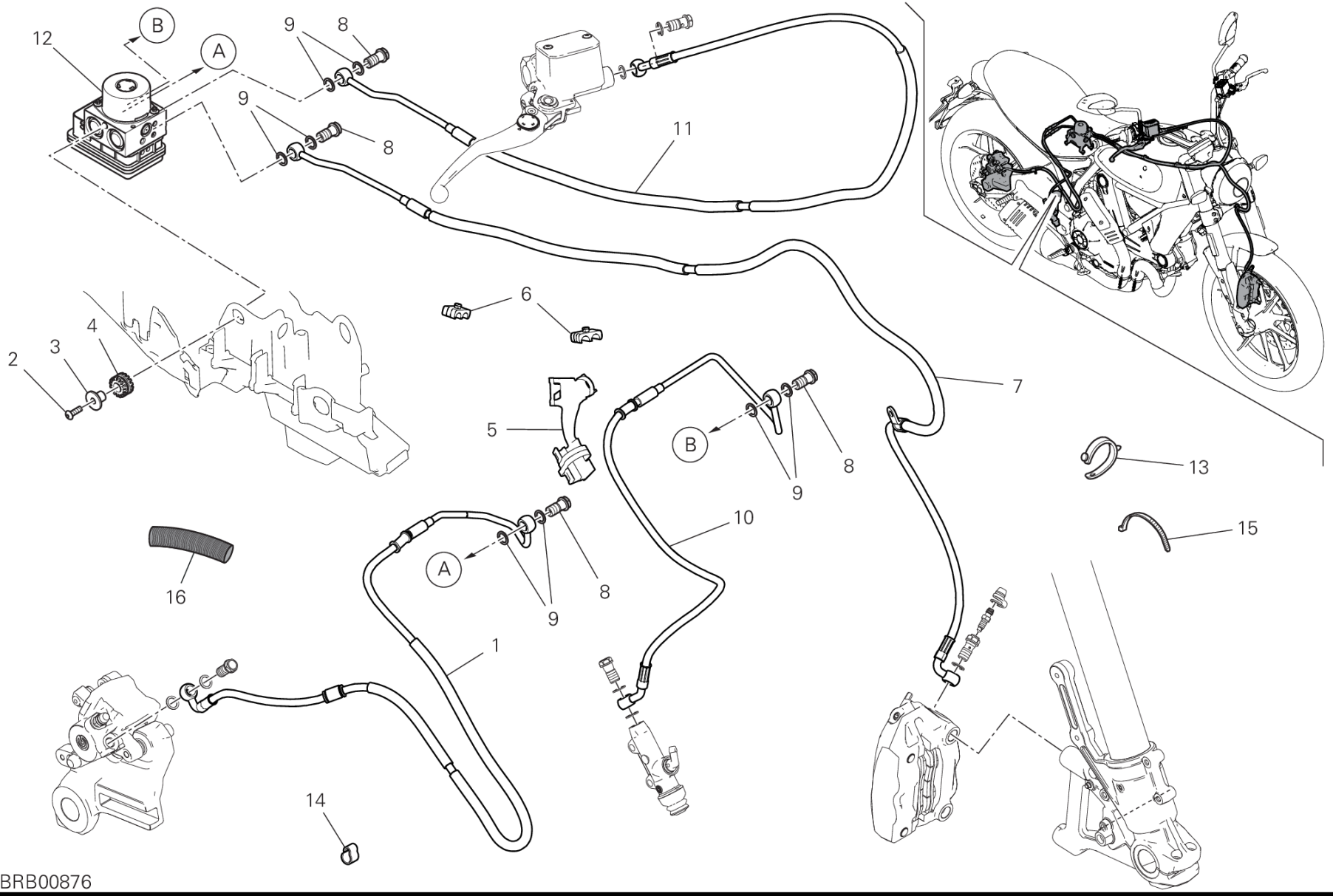
12
B
A
9
8
9
8
11
6
4
3
2
5
7
B
8
9
13
15
10
16
A
8
9
1
14
BRB00876

POS.	CODE	DESCRIPTION	QTY	VALIDITY	NOTES
1	61912021C	CPU-REAR CALIPER LINE	1		
2	77240453C	SCREW TBEIF M6X22 10.9	2		
3	71610031A	SPACER	2		
4	76410241A	VIBRATION DAMPER PAD	2		
5	75812171A		1		
6	86611121A	RUBBER PAD	2		
7	61812011C	CPU - FRONT CALIPERS LINE	1		
8	77913662AB	SCREW, SPECIAL	4		
9	85250241A	WASHER 10X14X1	8		
10	61912031C	REAR MASTER CYLINDER-CPU LINE	1		
11	61812021C	FRONT MASTER CYLINDER - CPU LINE	1		
12	54241101A	CONTROL UNIT ABS	1		
13	74140381A	CLAMP	2		
14	75812072A	FAIRLEAD	12		
15	75841221A	CLAMP	1		
16	4601H701A	PROTECTION SHEATH	1		

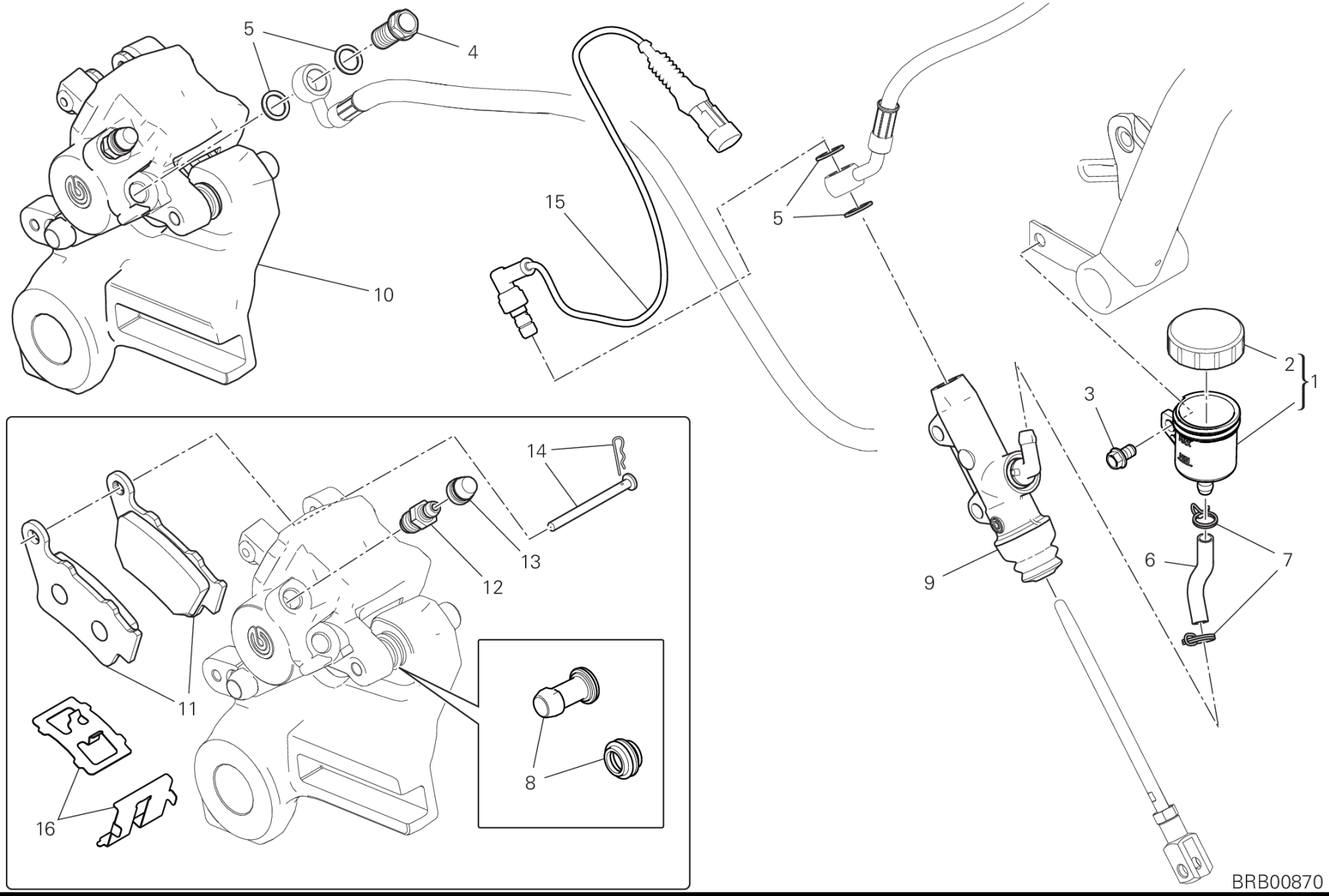
5
4
10
15
5
2
1
3
9
6
7
14
13
12
11
8
16
BRB00870

DRAWING 20D - REAR BRAKE SYSTEM

GROUP FRAME

POS.	CODE	DESCRIPTION	QTY	VALIDITY	NOTES
1	58540311A	RESERVOIR, BRAKE FLUID	1		
2	89340241A	COVER MASTER CYLINDER	1		
3	77210591A	SCREW TEF M6X10	1		
4	77913662AB	SCREW, SPECIAL	2		
5	85250241A	WASHER 10X14X1	4		
6	93310651A	HOSE, OIL	1		
7	74140431A	CLAMP	2		
8	61240302A	DUST COVER	2		
9	62540451A	REAR BRAKE PUMP	1		
10	61141701A	REAR BRAKE CALIPER	1		
11	61340761A	REAR BRAKE PADS SET	1		
12	63140281A	DRAIN	1		
13	61240052A	DUST COVER	1		
14	61241221A	PAD PINS OVERHAUL SET	1		
15	53941102C		1		
16	61240341A	SPRING, PAD STOPPER	1		

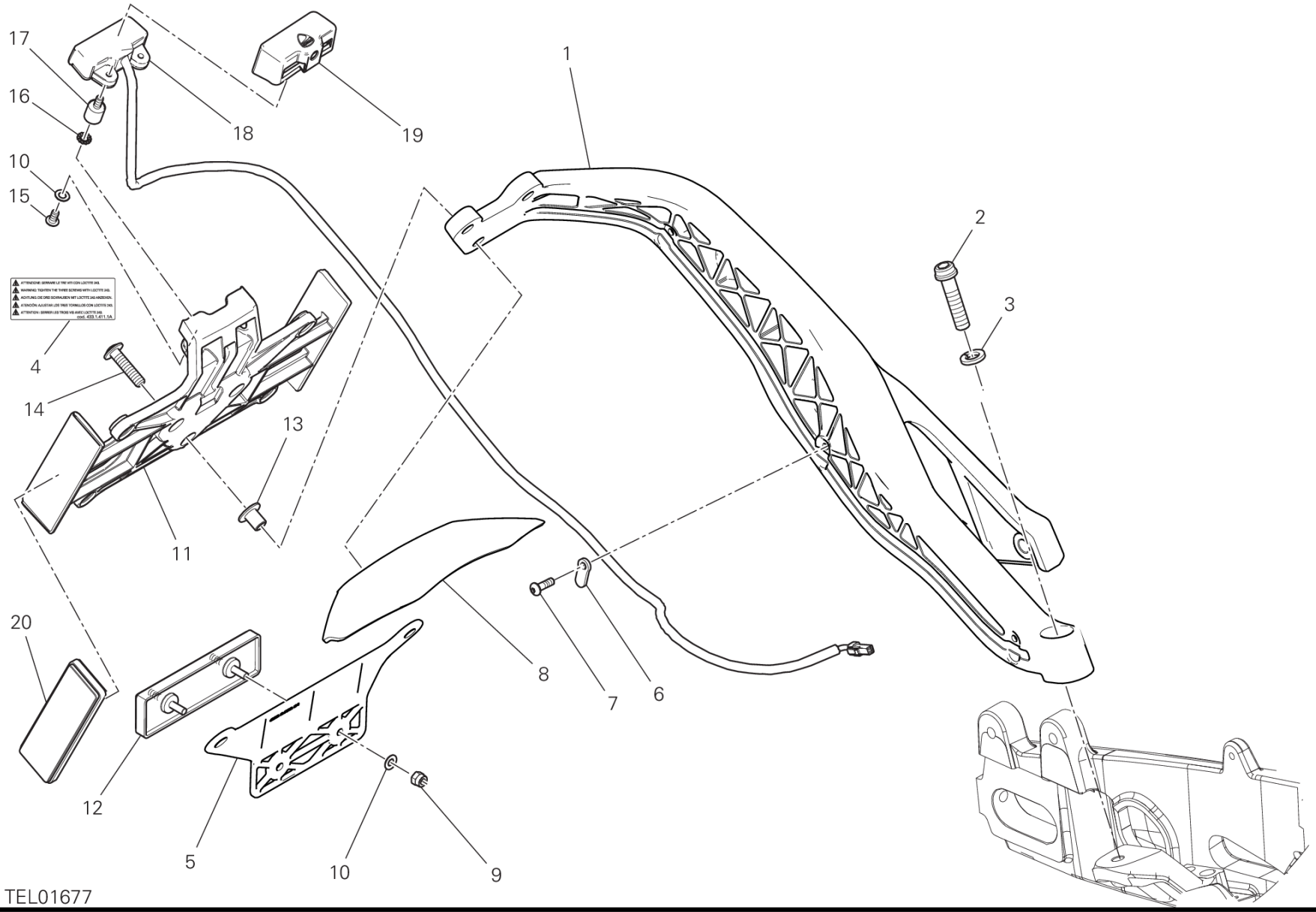
17
16
18
19
1
10
15
2
3
4
14
13
11
20
8
7
6
12
5
10
9
TEL01677

DRAWING 21A - PLATE HOLDER

GROUP FRAME

POS.	CODE	DESCRIPTION	QTY	VALIDITY	NOTES
1	56116471A	STAY COMP.	1		
2	7715727BF	SCREW	3		
3	85350061A	WASHER, SPRING	3		
4	43314111A	TARGHETTA ATTENZIONE	1		
5	82719301A		1		
6	75810901A	FAIRLEAD	3		
7	77440061A	SCREW, TAPPING	3		
8	4601I661A	MUDFLAP	1		
9	74950011B	NUT, SPRING	2		
10	85212511A	WASHER 4.5X9X0.5	4		
11	56113211A	PLATE HOLDER	1		
12	52910231A	REFLEX REFLECTOR, REAR	1		
13	71614261A	SPACER	3		
14	77240463C	VITE TBEIF	3		
15	77510161A	SCREW	2		
16	85550021A	TOOTHED LOCK WASHER	2		
17	70010691A	VIBRATION DAMPER	2		
18	52510431G	LAMP, LICENSE PLATE	1		
19	4601D781B	COVER	1		
20	52910131B	REFLECTOR, ADHESIVE RED	2		

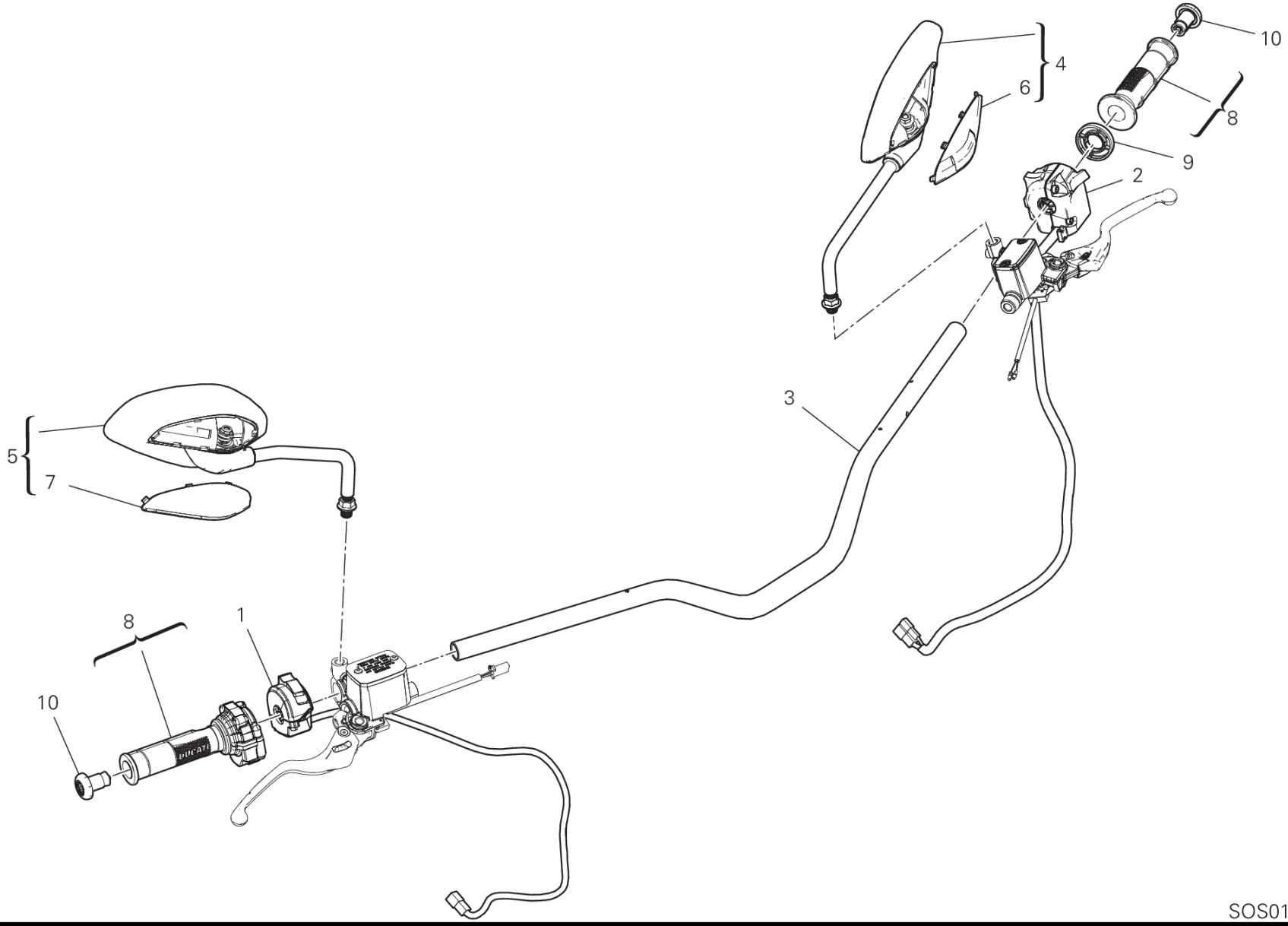

SOS01259

DRAWING 22A - HANDLEBAR

GROUP FRAME

POS.	CODE	DESCRIPTION	QTY	VALIDITY	NOTES
1	65010271C	RIGHT SWITCH	1		
	65010431B	RIGHT SWITCH	1	XST:CDN	
2	65110611A	LEFT SWITCH	1		
3	36016281AA	HANDLEBAR	1		
4	52310482B	REAR-VIEW MIRROR L.H.	1		
5	52310492B	REAR-VIEW MIRROR R.H.	1		
6	24715051A	LEFT COVER	1		
7	24715041A	RIGHT COVER	1		
8	66020091C	THROTTLE CONTROL	1		
9	71316171A	SPACER	1		
10	87210691A	PLUG	2		

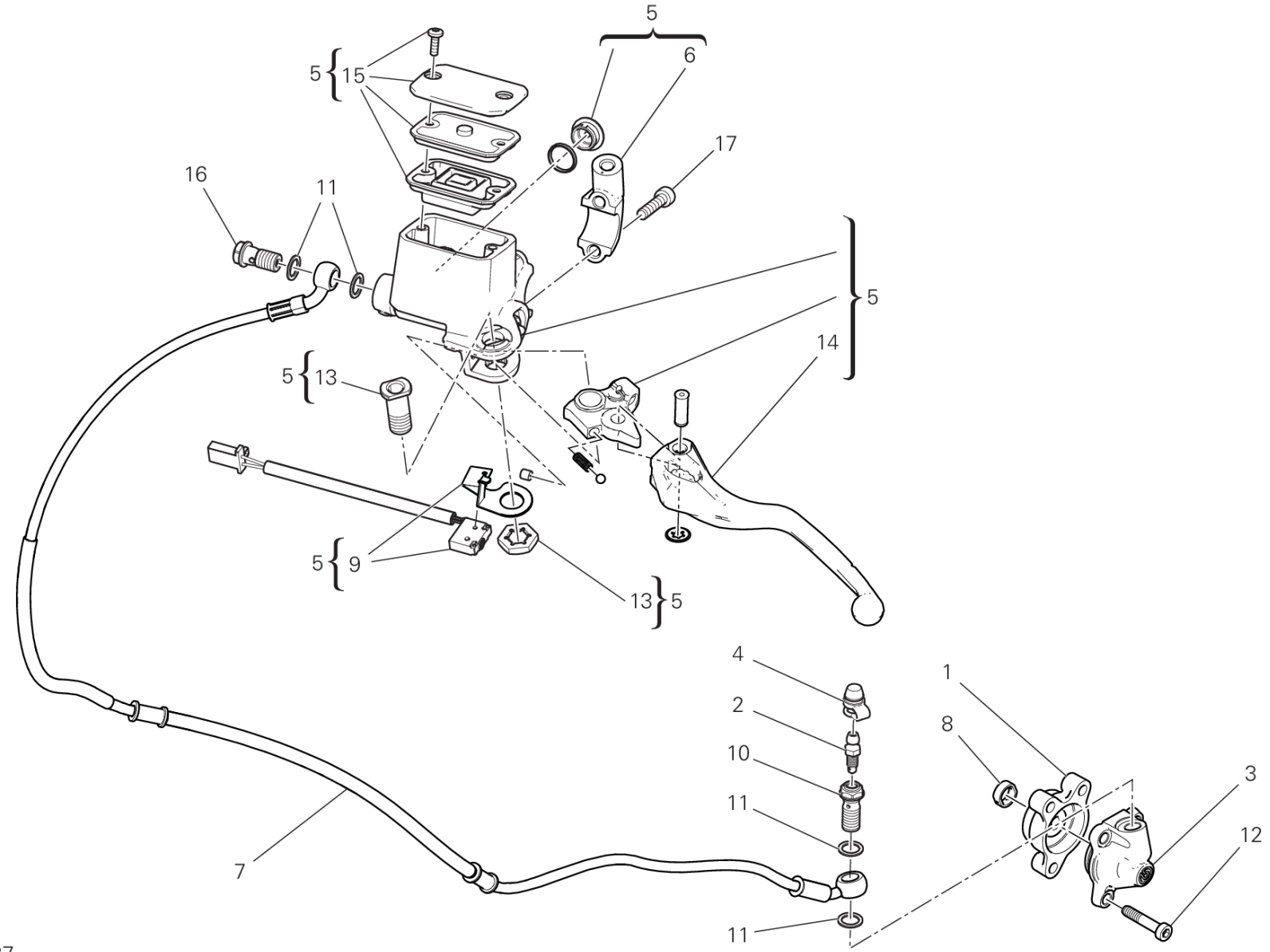

BRB00827

DRAWING 22B - CLUTCH CONTROL

GROUP FRAME

POS.	CODE	DESCRIPTION	QTY	VALIDITY	NOTES
1	19510411D	SPACER	1		
2	18710021A	VALVE, BREATHER	1		
3	19540081B	PISTON ASSEMBLY	1		
4	61240052A	DUST COVER	1		
5	63041051A	CLUTCH MASTER CYLINDER	1		
6	62640291A	BRACKET, CLUTCH MASTER CYLINDER	1		
7	63210871A	CLUTCH CONTROL PIPE	1		
8	78811641C	GASKET	1		
9	53910741A	MICROSWITCH	1		
10	77913971A	BOLT, BRAKE HOSE	1		
11	85250241A	WASHER 10X14X1	4		
12	77354898B	SCREW TCEIR M6X30	3		
13	62640601A	BOLT, PIVOT	1		
14	62641301A	LEVER, CLUTCH LIFTER	1		
15	89340341A	PLUG ASSY	1		
16	77913662AB	SCREW, SPECIAL	1		
17	77150693B	SCREW	2		

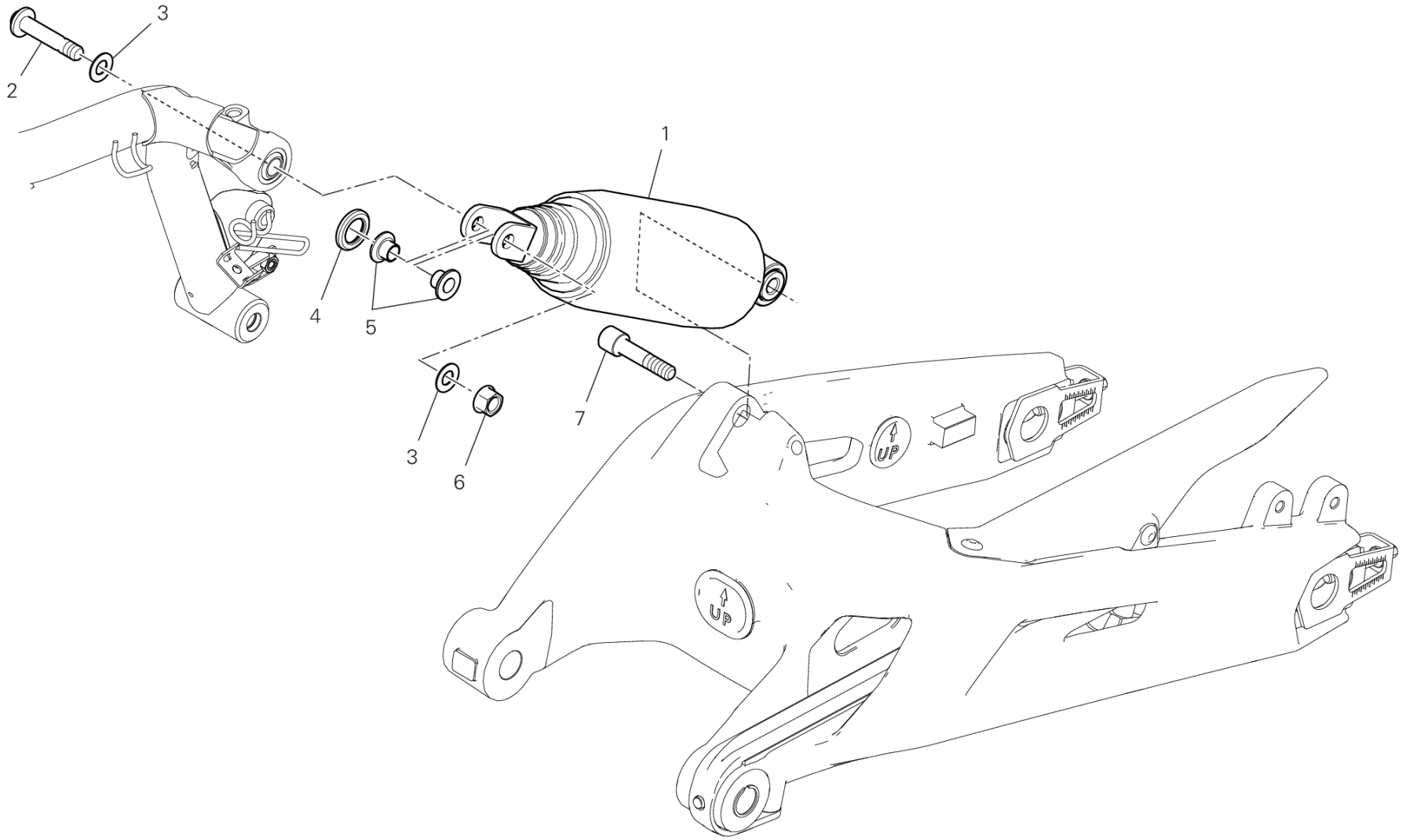

SOS01252

DRAWING 23A - REAR SHOCK ABSORBER

GROUP FRAME

POS.	CODE	DESCRIPTION	QTY	VALIDITY	NOTES
1	365P1551B	REAR SHOCK ABSORBER	1		
2	7791A991AA	SCREW, SPECIAL	1		
3	85210541B	WASHER 10.2X20X1	2		
4	71510081B	SPACER	1		
5	71011321A	BUSH 10X18X11	2		
6	74850021A	NUT	1		
7	77915041A	SCREW, SPECIAL	1		

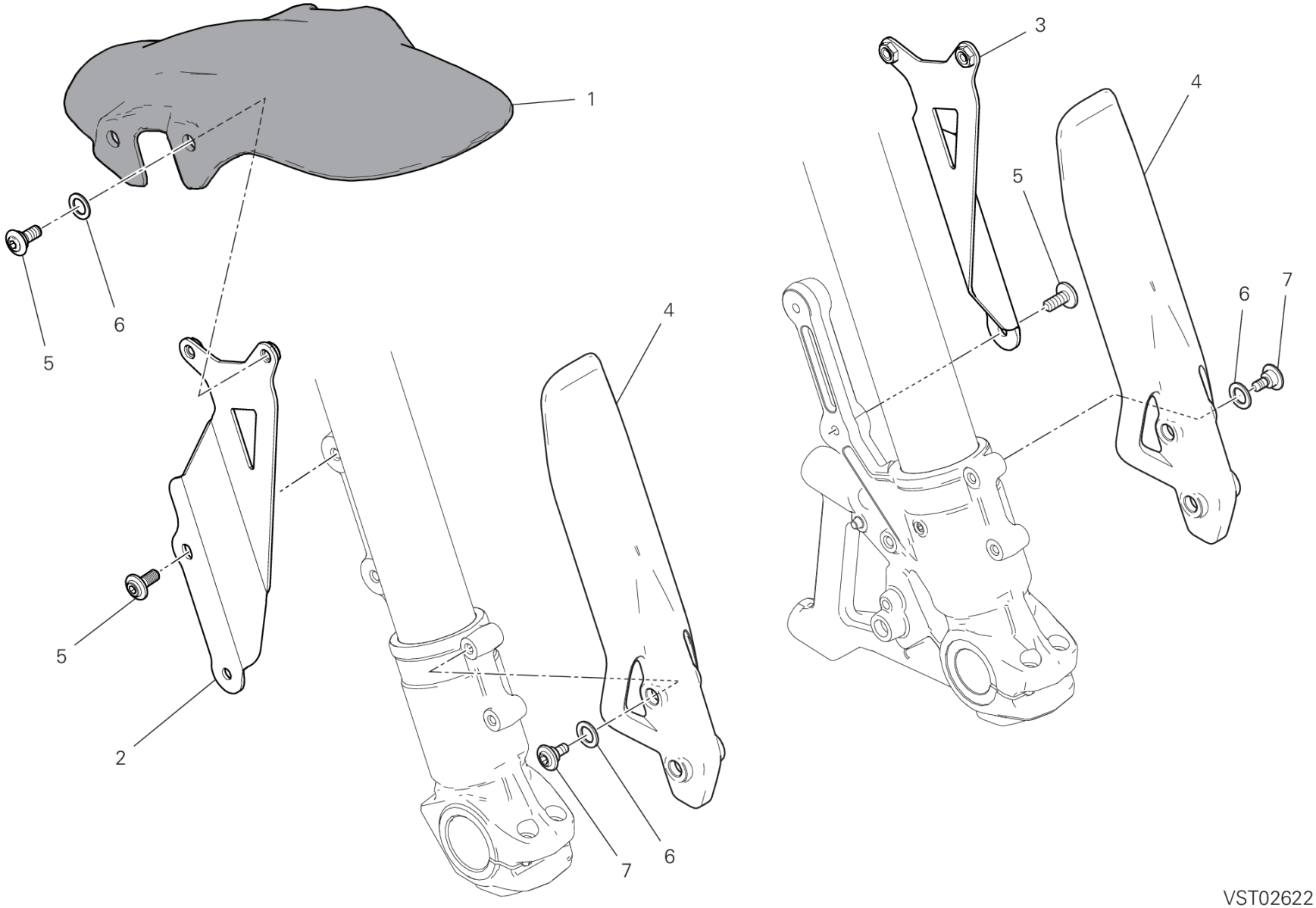

VST02622

DRAWING 24A - FRONT MUDGUARD

GROUP FRAME

POS.	CODE	DESCRIPTION	QTY	VALIDITY	NOTES
1	56416591AE	FRONT MUDGUARD	1		
	56416591AF	FRONT MUDGUARD	1		
2	8301B021AA	BRACKET	1		
3	8301B031AA	BRACKET	1		
4	4601C091A	GUARD	2		
5	77214411BA	SCREW, SPECIAL	8		
6	85212181A	WASHER, NYLON 9X14X1	8		
7	77210893B	SCREW	4		

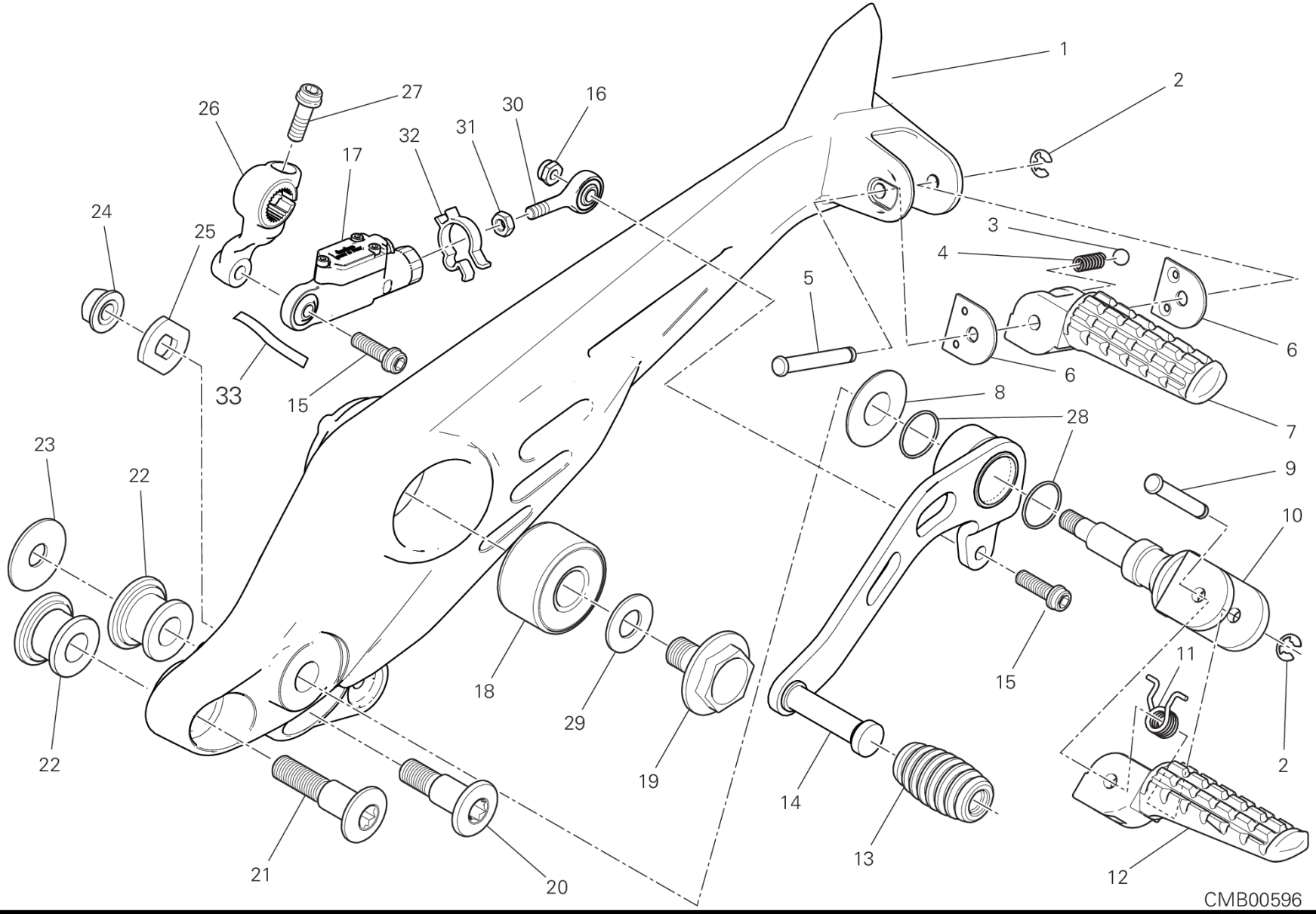
1
2
3
4
5
6
6
7
8
9
10
11
2
12
13
14
15
15
16
17
18
19
20
21
22
22
23
24
25
26
27
28
29
30
31
32
33
CMB00596

DRAWING 26A - FOOTRESTS, LEFT

GROUP FRAME

POS.	CODE	DESCRIPTION	QTY	VALIDITY	NOTES
1	82414541AA	L.H. FOOT PEG HOLDER PLATE	1		
2	88450031A	CIRCLIP E-TYPE	2		
3	84740021A	BALL	1		
4	79910241B	SPRING	1		
5	82110901B	FOOTREST PIN	1		
6	82711611B	PLATE	2		
7	46510611A	REAR LEFT FOOT-REST	1		
8	85213861AA	WASHER	1		
9	82110681B	FOOTREST PIN	1		
10	46410941BA	HOLDER	1		
11	79914991A	SPRING. FOOTREST	1		
12	46410461A	FOOTREST, FRONT LH	1		
13	76510171A	COVER PEDAL	1		
14	96222221AA	GEARCHANGE LEVER	1		
15	77156688B	SCREW TCEIF	2		
16	74940041A	NUT, SELF-LOCKING M6	1		
17	5521B352B		1		
18	70011161A	DAMPER FOOTREST	1		
19	77911511AA	SCREW, SPECIAL	1		
20	77914181AA	SCREW, SPECIAL	1		
21	77912061AB	SCREW	1		
22	70010491A	DAMPER	2		
23	85210651B	WASHER 10.2X31X1.5	1		
24	74941128B	NUT M8	1		
25	85213871AA	WASHER, SPECIAL	1		
26	45612631AA	GEAR CONTROL LEVER	1		
27	77110191A	SCREW TCEIF M6X20	1		
28	88642431A	O-RING	2		
29	85211571A	WASHER 12.2X25X1.5	1		
30	84850021A	BALL JOINT	1		
31	74750101A	NUT 6MM	1		
32	75811582AA	FAIRLEAD	1		
33	92611021A	PELLICOLA ADESIVA ANTIABRASIONE	1		

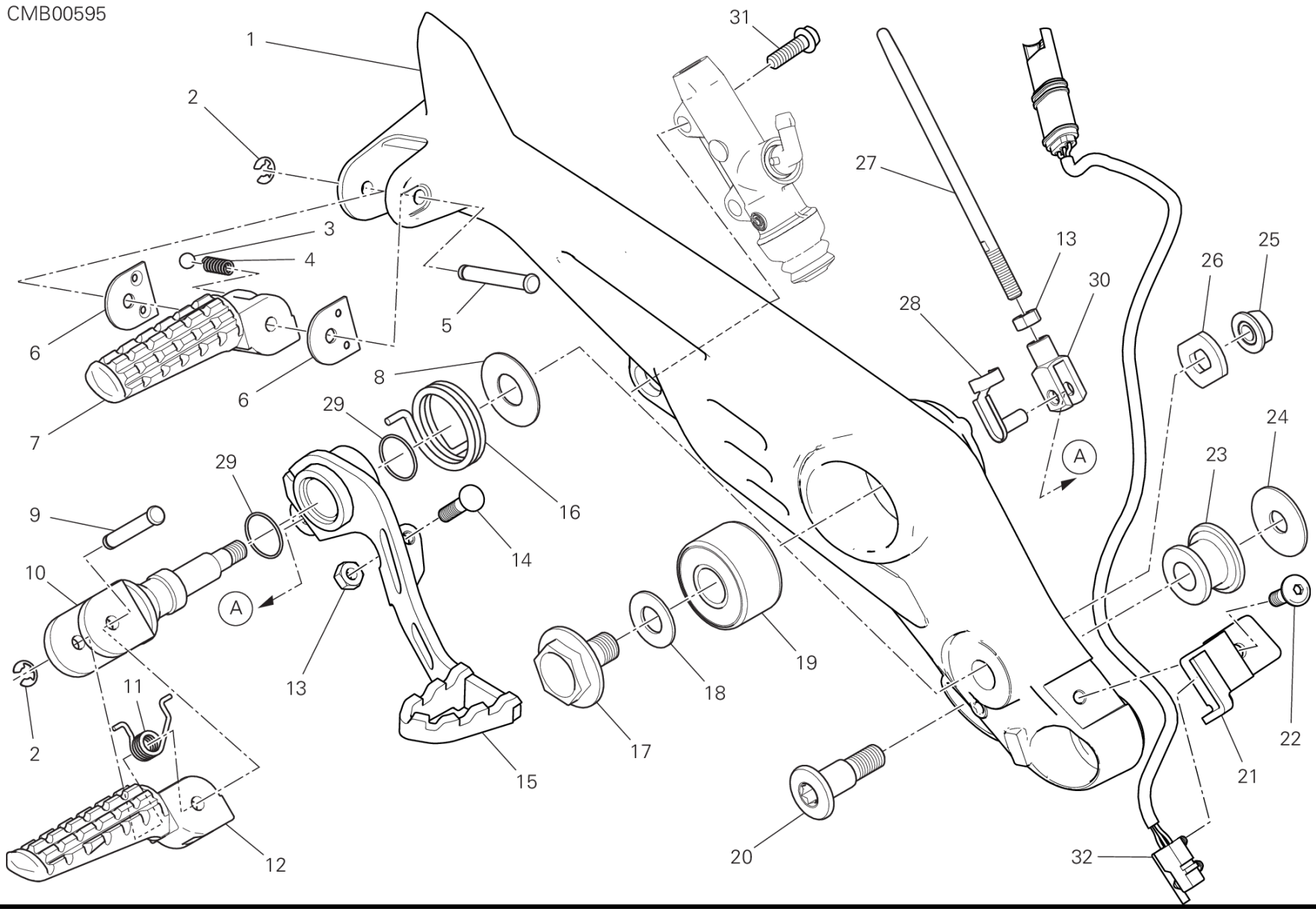
CMB00595
1
2
3
4
5
6
6
7
8
9
10
11
2
12
13
14
15
16
29
29
31
27
13
30
28
25
26
24
23
A
A
19
18
17
20
22
21
32

DRAWING 26B - FOOTRESTS, RIGHT

GROUP FRAME

POS.	CODE	DESCRIPTION	QTY	VALIDITY	NOTES
1	82414551AA	R.H. FOOT PEG HOLDER PLATE	1		
2	88450031A	CIRCLIP E-TYPE	2		
3	84740021A	BALL	1		
4	79910241A	SPRING	1		
5	82110901B	FOOTREST PIN	1		
6	82711611B	PLATE	2		
7	46510601A	REAR RIGHT FOOTREST	1		
8	85213861AA	WASHER	1		
9	82110681B	FOOTREST PIN	1		
10	46410941BA	HOLDER	1		
11	79914991A	SPRING. FOOTREST	1		
12	46410451A	FOOTREST, FRONT RH	1		
13	74750031A	NUT 6MM	2		
14	77912371B	SCREW	1		
15	45721011AB	BRAKE CONTROL LEVER	1		
16	79915863A	SPRING	1		
17	77911511AA	SCREW, SPECIAL	1		
18	85211571A	WASHER 12.2X25X1.5	1		
19	70011161A	DAMPER FOOTREST	1		
20	77914181AA	SCREW, SPECIAL	2		
21	8301A851AA	HOLDER SENSOR	1		
22	77210893B	SCREW	1		
23	70010491A	DAMPER	2		
24	85210651B	WASHER 10.2X31X1.5	1		
25	74941128B	NUT M8	1		
26	85213871AA	WASHER, SPECIAL	1		
27	11711523AA	ROD, BRAKE	1		
28	85010151A	QUICK FASTENING	1		
29	88642431A	O-RING	2		
30	18410051A	FORK HEADS DIN 71752	1		
31	77210631A	SCREW TEF M6X20	2		
32	53920901A	SWITCH, REAR BRAKE	1		

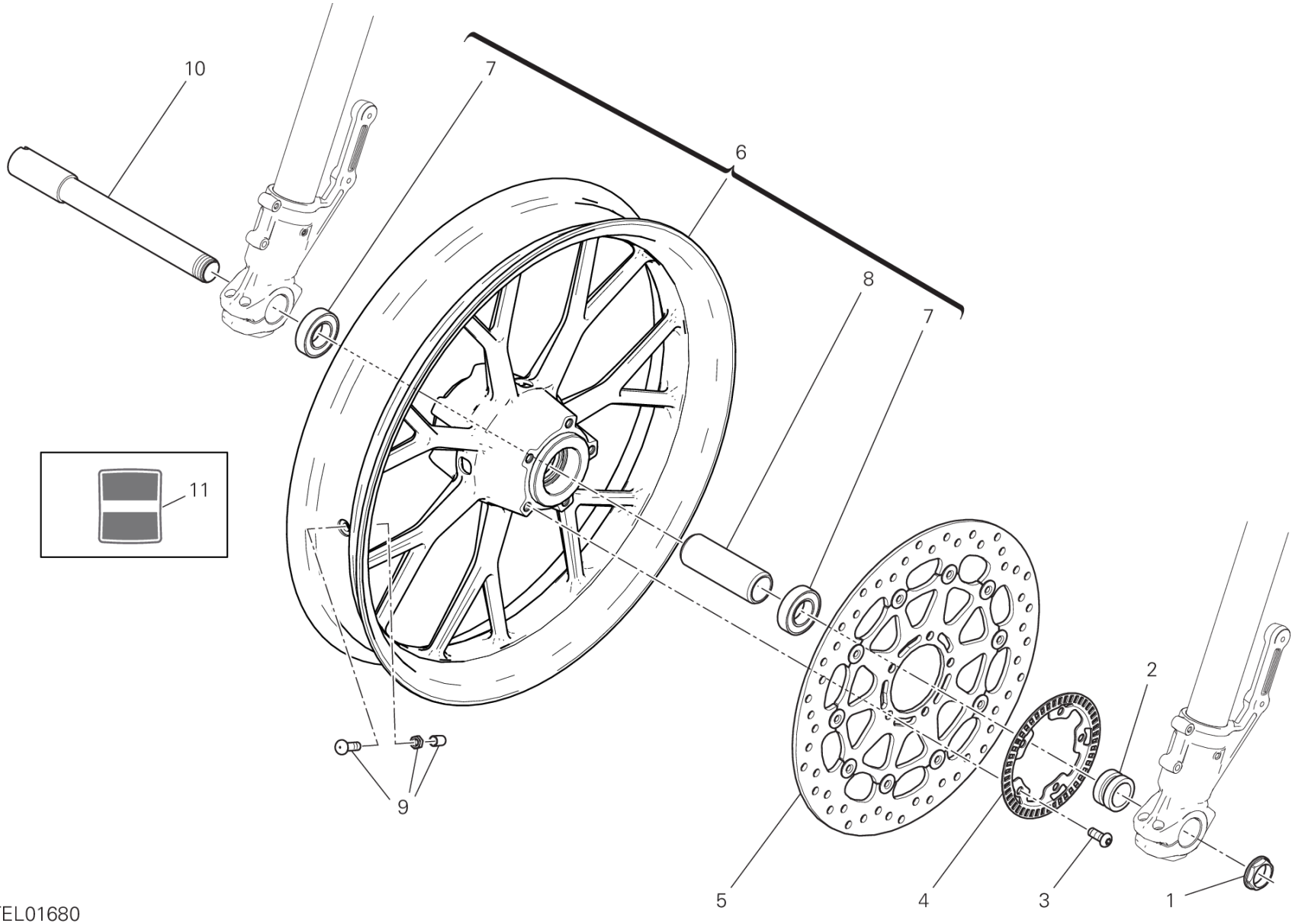

TEL01680

DRAWING 28A - FRONT WHEEL

GROUP FRAME

POS.	CODE	DESCRIPTION	QTY	VALIDITY	NOTES
1	74810141C	NUT M25X1.25	1		
2	71311973A	LEFT SPACER	1		
3	72010513C	SCREW	5		
4	504Z0381AA	PHONIC WHEEL	1		
5	49241411A	FRONT BRAKE DISC	1		
6	50122831AA	FRONT WHEEL RIM	1		
7	70250621A	BEARING	2		
8	71410941A	INNER SPACER	1		
9	49720031A	VALVE, TUBELESS TIRE	1		
10	81910781AA	FRONT WHEEL SPINDLE	1		
11	4381H221AA	TRANSFER	1		

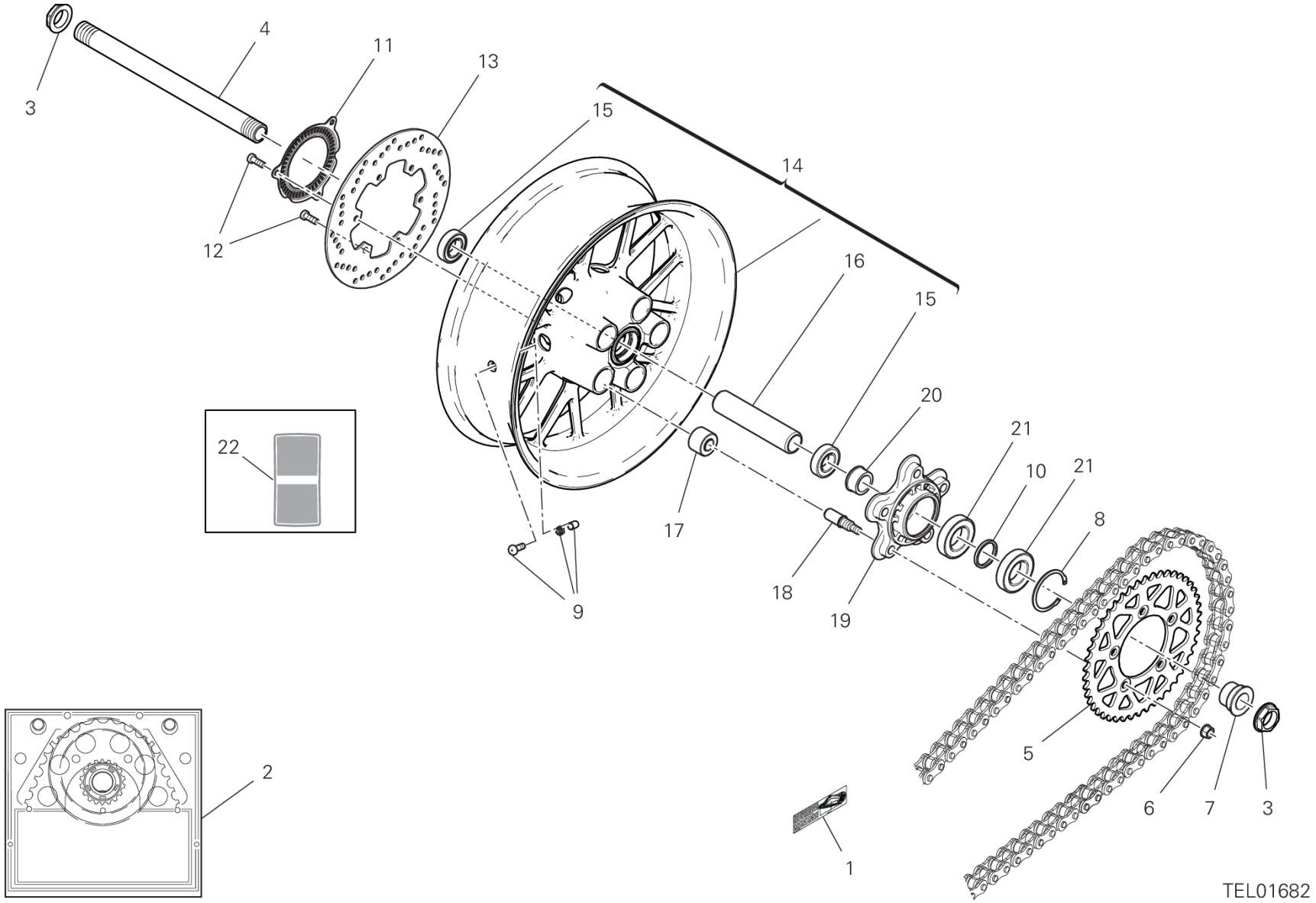
4
11
13
3
15
14
12
16
15
20
21
22
10
21
8
17
18
19
9
5
6
7
3
2
1
TEL01682

DRAWING 29A - REAR WHEEL

GROUP FRAME

POS.	CODE	DESCRIPTION	QTY	VALIDITY	NOTES
1	43315161A	CHAIN ADJUSTMENT STICKER	1		
2	67621301A	FINAL DRIVE KIT	1		
3	74810232B	NUT	2		
4	81910791AA	REAR WHEEL SPINDLE	1		
5	49411651AA	REAR SPROCKET T46	1		
6	74840241AB	NUT	5		
7	7131A811A	OUTSIDE SPACER	1		
8	88440061A	CIRCLIP	1		
9	49720071AC	VALVE, TUBELESS TIRE	1		
10	71311841A	INNER SPACER	1		
11	50410061A	REAR PHONIC WHEEL	1		
12	77310071A	SCREW	6		
13	49240032A	REAR BRAKE DISC	1		
14	50222511AA	REAR WHEEL RIM	1		
15	70250621A	BEARING	2		
16	7131C551A	INNER SPACER	1		
17	70010591A	WHEEL RUNNER BUSH	5		
18	82110091B	SPRING DRIVE FIXING BUSH	5		
19	16022491A	DRUM, SPROCKET MOUNTING ASSY	1		
20	7131A801A	INNER SPACER	1		
21	70240381A	BEARING	2		
22	4381H231AA	TRANSFER	1		

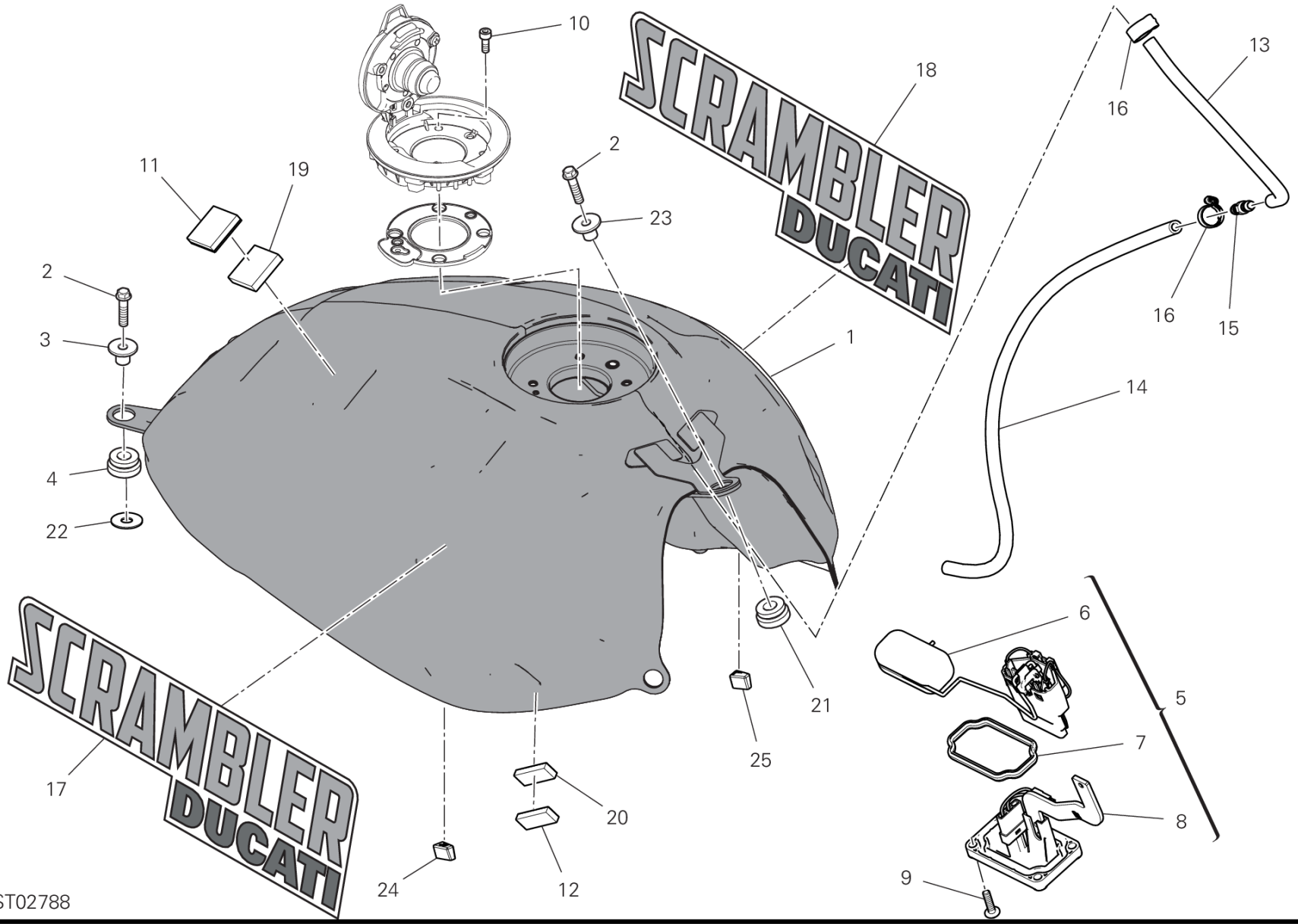
10
18
13
16
11
19
2
23
2
3
1
16
15
14
4
22
6
5
21
7
17
25
20
8
9
24
12
VST02788

DRAWING 30A - TANK

GROUP FRAME

POS.	CODE	DESCRIPTION	QTY	VALIDITY	NOTES
1	58613181DC	FUEL TANK	1		
2	77251023C	SCREW TEF M6X22 10.9	3		
3	71616151AA	SPACER 6.5X8.5X20.5	3		
4	76412021B	RUBBER PAD	2		
5	59210261A	FUEL LEVEL GAUGE	1		
6	42520071A	FUEL LEVEL GAUGE	1		
7	42520061A	GASKET	1		
8	42520081A	FLANGE FUEL LEVEL SENSOR	1		
9	77244213B	SCREW TBEI M5X20	4		
10	77150408B	SCREW TCEI M5X14	4		
11	85042242A	DUAL LOCK	8		
12	85044791A	DUAL LOCK	2		
13	93510491A	BREATHER PIPE	1		
14	93510501A	BREATHER PIPE	1		
15	81416361A	UNION	1		
16	74140651A	FASCETTA 11-7 MM	2		
17	4381H241A	TRANSFER	1		
18	4381H251A	LEFT STICKER	1		
19	86613281A	ADHESIVE PAD	8		
20	78812011A	RUBBER PAD	1		
21	76417791A	RUBBER PAD	1		
22	85241701A	WASHER	1		
23	71614191A	SPACER 6.25X10X21	1		
24	86614011A	PAD	1		
25	86614021A	PAD	1		

IMP01583

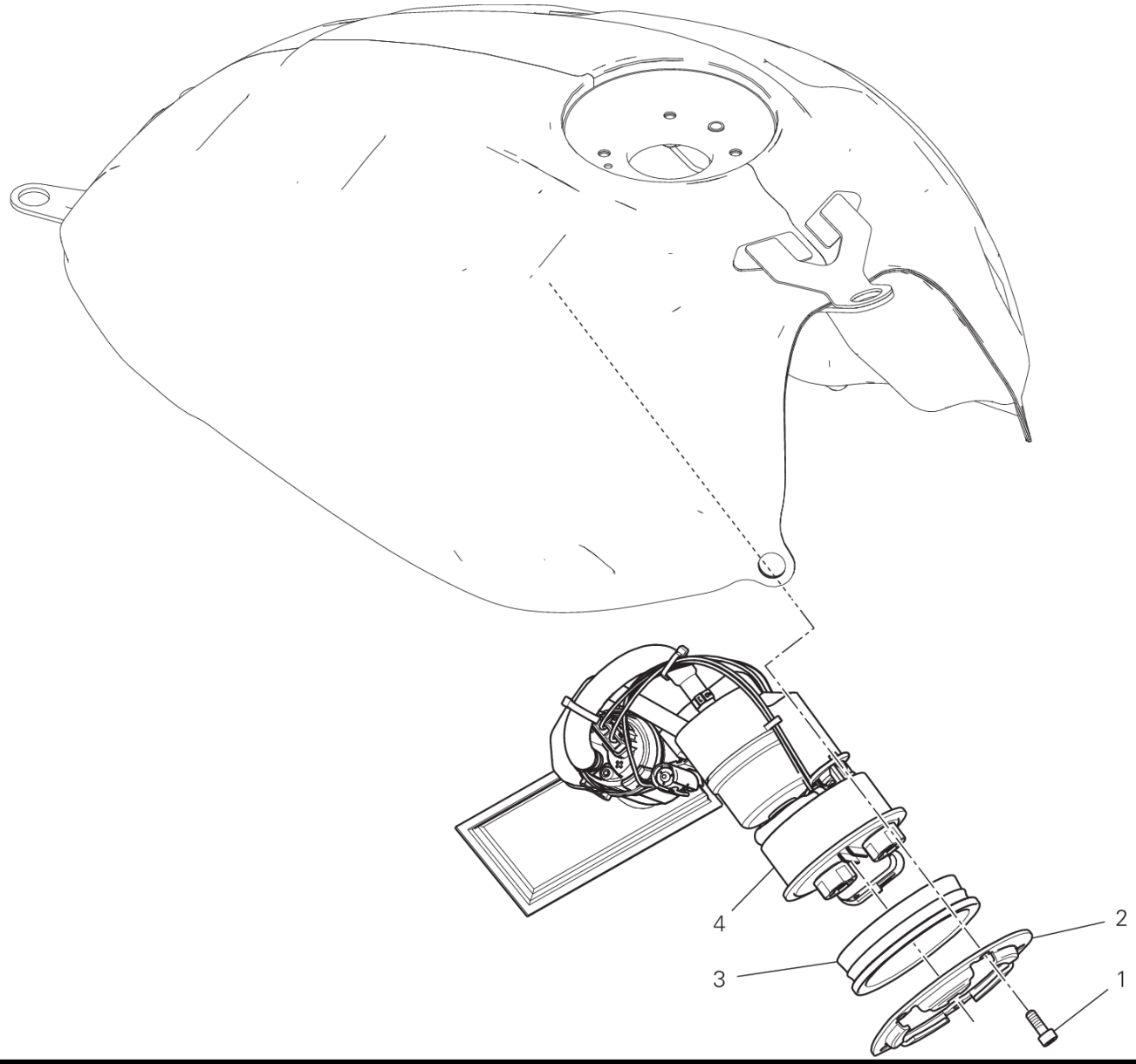

DRAWING 30B - FUEL PUMP

GROUP FRAME

POS.	CODE	DESCRIPTION	QTY	VALIDITY	NOTES
1	77150408B	SCREW TCEI M5X14	5		
2	16014853A	BRACKET, FUEL PUMP	1		
3	79111131B	GASKET	1		
	79111371A	GASKET	1		
4	16024381A	FUEL PUMP	1		

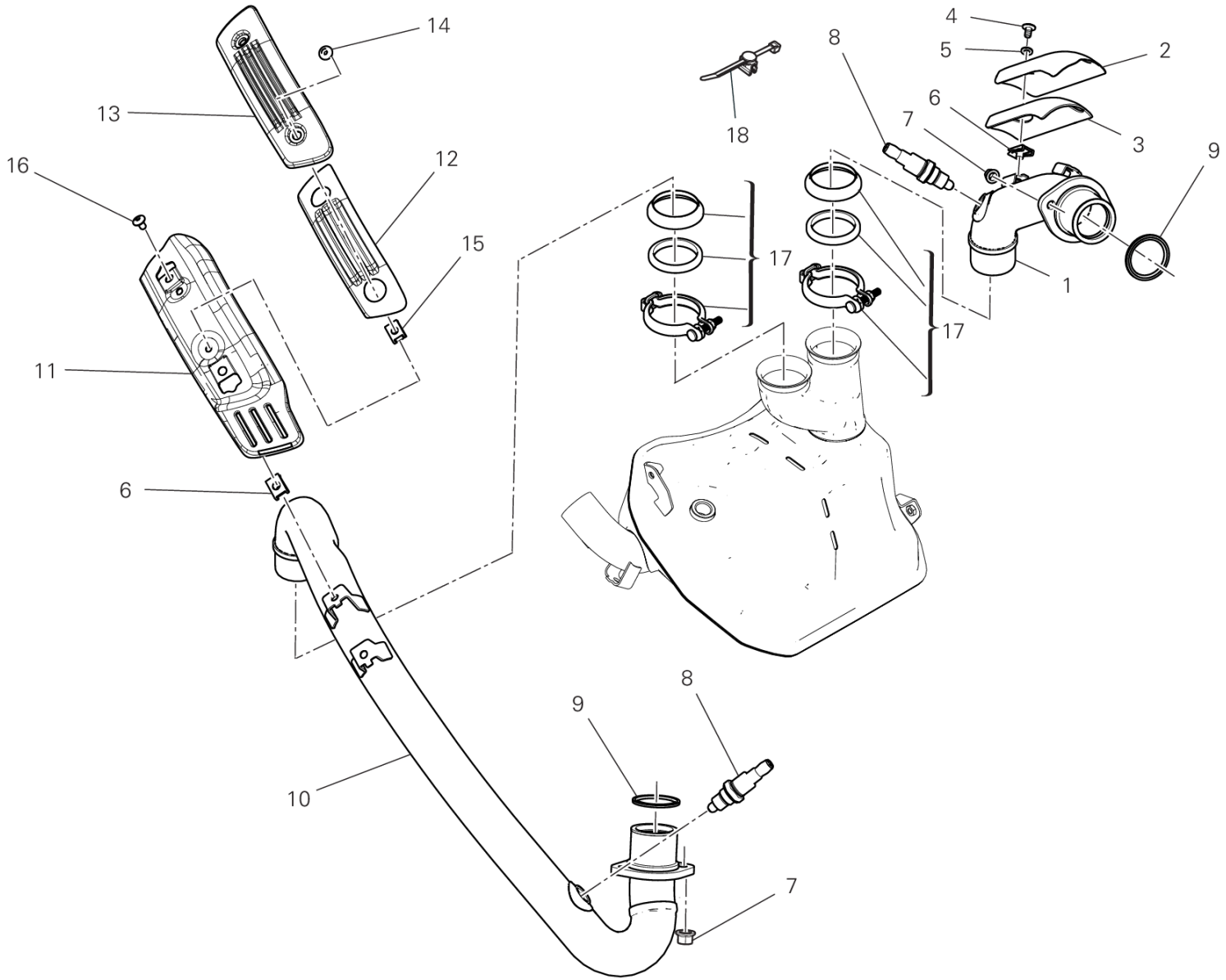

SCR00427

DRAWING 31A - EXHAUSRT PIPE ASSY

GROUP FRAME

POS.	CODE	DESCRIPTION	QTY	VALIDITY	NOTES
1	57115241A	EXHAUST PIPE VERTICAL	1		
2	4601M872A	HEAT GUARD	1		
3	4601M881A	GUARD	1		
4	72050159EA	SCREW	2		
5	85240131A	WASHER 5.3X15X1	2		
6	85040381A	QUICK FASTENING	4		
7	74840331A	NUT M8	4		
8	55214491B	SENSOR LAMBDA SOND	2		
9	79010261A	GASKET, EXHAUST PIPE	2		
10	57015351A	EXHAUST PIPE HORIZONTAL	1		
11	46111391AA	HEAT GUARD HORIZONTAL	1		
	46111391AB	HEAT GUARD	1		
12	4601M761A	THERMOREFLECTING PROTECTION	4		
13	4601M751B	HEAT GUARD BOTTOM	1		
14	77214411BA	SCREW, SPECIAL	2		
15	85044691A	QUICK FASTENING	2		
16	77211021A	SCREW TBEIF M6X10	2		
17	575P0071A	EXHAUST JOINT KIT	2		
18	75840771A	FAIRLEAD	1		

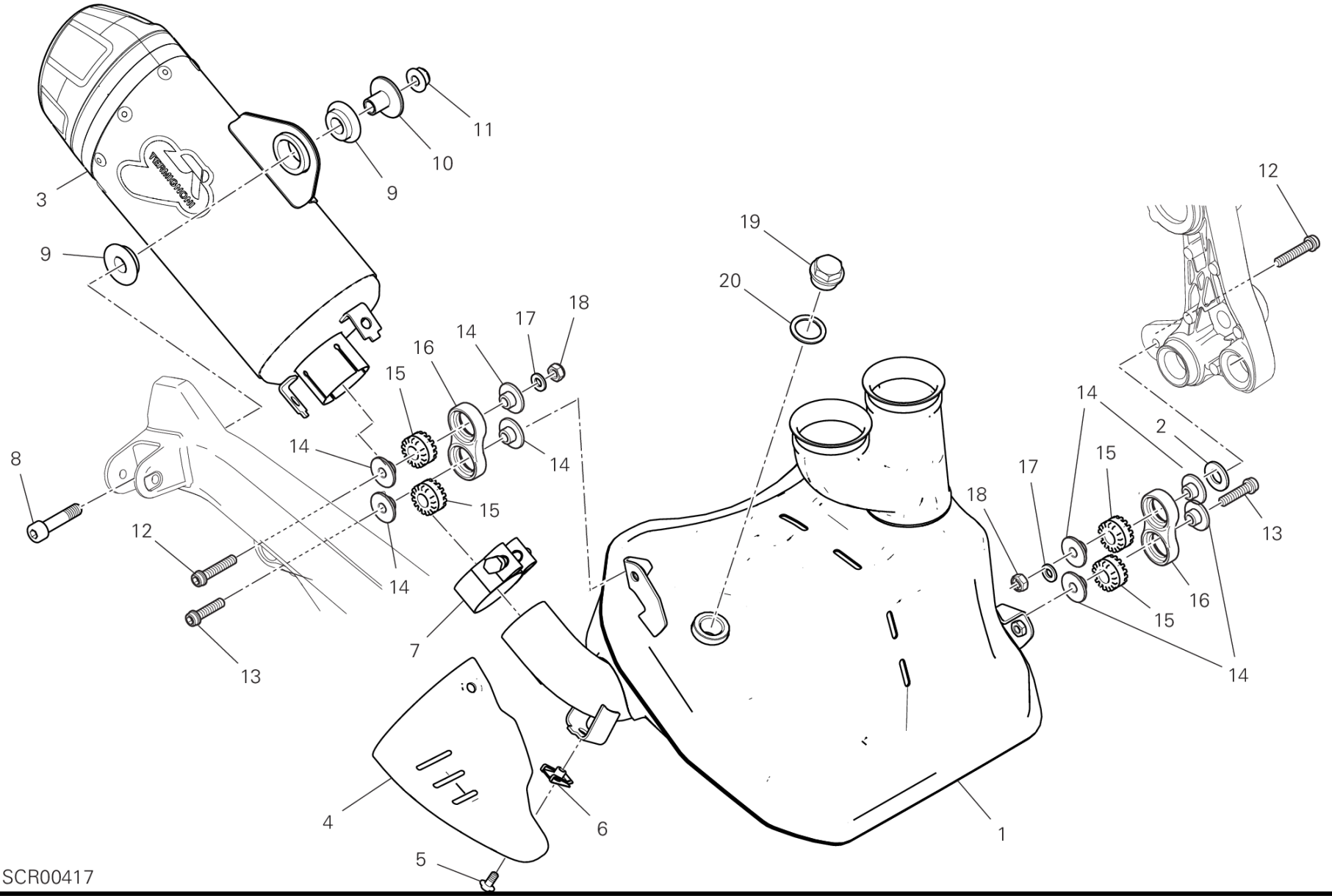
TERMIGNONI
3
9
9
10
11
12
19
20
18
17
14
16
15
14
14
8
12
13
14
15
7
4
5
6
1
14
15
16
15
17
18
2
13
14
SCR00417

DRAWING 31B - EXHAUST SILENCER

GROUP FRAME

POS.	CODE	DESCRIPTION	QTY	VALIDITY	NOTES
1	57212241B	PRESILENCER	1		
2	85610642A	WASHER, SPECIAL 10.5X21X2	1		
3	96424571AA	SILENCER	1		
4	4601M741AB	HEAT GUARD	1		
5	77244163B	SCREW TBEI M5X10	3		
6	85044691A	QUICK FASTENING	3		
7	74142901A	CLAMP	1		
8	77151283B	SCREW	1		
9	76410011A	DAMPER	2		
10	71616291AA	SPACER	1		
11	74940321A	NUT	1		
12	77156718B	SCREW TCEIF	2		
13	77156698B	SCREW TCEIF M6X25	2		
14	71614141A	SPACER 6.25X10X5.75	8		
15	76410241A	VIBRATION DAMPER PAD	4		
16	57610671A	BRACKET, SILENCER	2		
17	85211761A	WASHER 6.4X12.5X1.6	2		
18	74941118B	NUT 6MM	2		
19	78040081A	PLUG	1		
20	85241851A	WASHER	1		

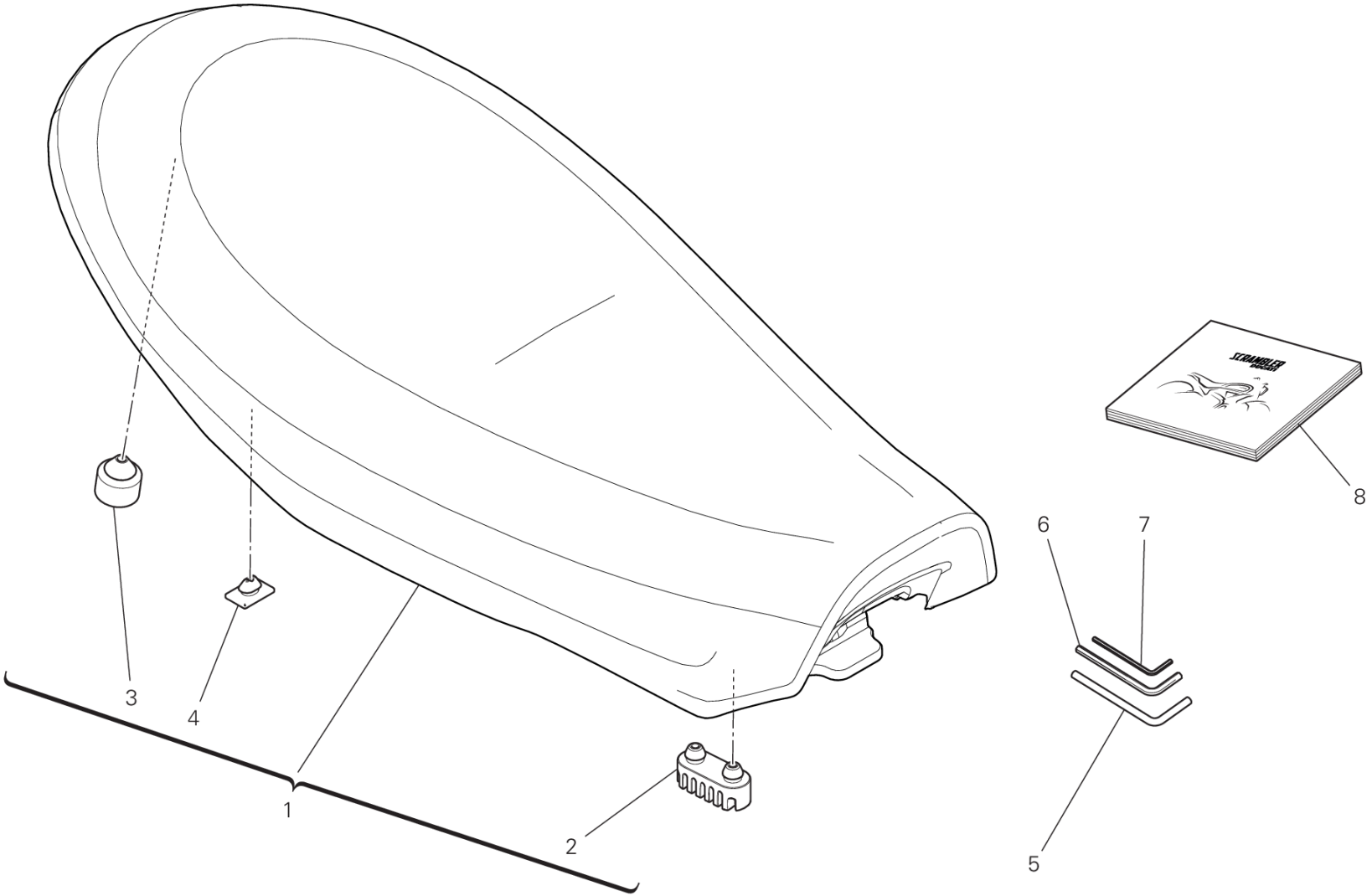

VST02628

POS.	CODE	DESCRIPTION	QTY	VALIDITY	NOTES
1	59517281BB	SEAT	1		
2	86610191A	CUSHION, SEAT	4		
3	76411741A	RUBBER PAD	2		
4	86610301A	PAD	2		
5	69710391A	BENT SCREWDRIVER	1		
6	69710141A	5 MM ALLEN WRENCH	1		
7	69710151A	4 MM ALLEN WRENCH	1		
8	91376821AR	OWNER'S MANUAL	1		ARABIC
	91376821BG	OWNER'S MANUAL	1		BULGARIAN
	91376821CA	OWNER'S MANUAL	1		CANADA/FRA
	91376821CS	OWNER'S MANUAL	1		CZECH REPUBLIC
	91376821DA	OWNER'S MANUAL	1		DENMARK
	91376821DE	OWNER'S MANUAL	1		GERMAN
	91376821EL	OWNER'S MANUAL	1		GREECE
	91376821EN	OWNER'S MANUAL	1		ENGLISH
	91376821ES	OWNER'S MANUAL	1		SPANISH
	91376821FI	OWNER'S MANUAL	1		FINLAND
	91376821FR	OWNER'S MANUAL	1		FRENCH
	91376821HR	OWNER'S MANUAL	1		CROATIA
	91376821HU	OWNER'S MANUAL	1		HUNGARY
	91376821IT	OWNER'S MANUAL	1		ITALY
	91376821JA	OWNER'S MANUAL	1		JAPAN
	91376821KO	OWNER'S MANUAL	1		KOREA
	91376821MX	OWNER'S MANUAL	1		MEXICO/ESP
	91376821NL	OWNER'S MANUAL	1		HOLLAND
	91376821NO	OWNER'S MANUAL	1		NORWAY
	91376821PL	OWNER'S MANUAL	1		POLAND
	91376821PT	OWNER'S MANUAL	1		PORTUGAL
	91376821RO	OWNER'S MANUAL	1		ROMANIA
	91376821RU	OWNER'S MANUAL	1		RUSSIAN
	91376821SK	OWNER'S MANUAL	1		SLOVAK
	91376821SL	OWNER'S MANUAL	1		SLOVENIAN
	91376821SV	OWNER'S MANUAL	1		SWEDISH
	91376821US	OWNER'S MANUAL	1		USA
	91376821ZH	OWNER'S MANUAL	1		TRADITIONAL CHINESE

TEL01672

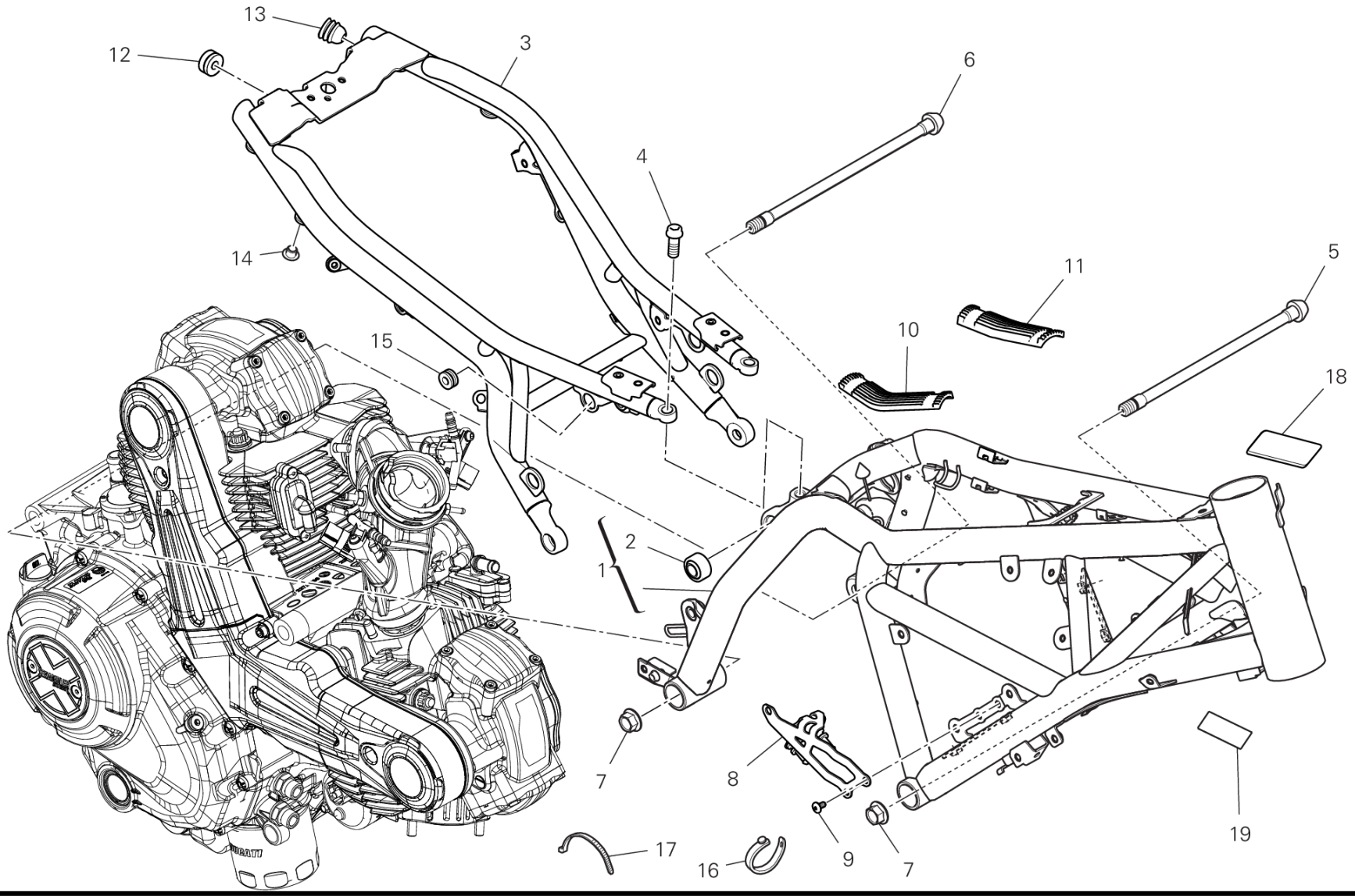

DRAWING 33A - FRAME

GROUP FRAME

POS.	CODE	DESCRIPTION	QTY	VALIDITY	NOTES
1	47028451BA	FRONT FRAME	1		
2	84840111A	BALL JOINT	1		
3	47018461AA	REAR FRAME	1		
4	7715754BG	SCREW TCEIF M10X25	4		
5	7791A131AA	PIN	1		
6	7791A141AA	PIN	1		
7	74841011AA	NUT, FLANGE	2		
8	8271H921BB	PLATE	1		
9	77240254C	SCREW	2		
10	86612921A	RIGHT PAD	1		
11	86612931A	LEFT PAD	1		
12	76412281A	RUBBER PAD	3		
13	87211851A	PLUG	2		
14	87241331A	PLUG	4		
15	76411501A	RUBBER PAD	4		
16	74110131A	CLAMP, RUBBER 82MM	4		
17	74142831A	CLAMP	1		
18	86612101A	PAD	2		
19	92610051A	GUARD	2		

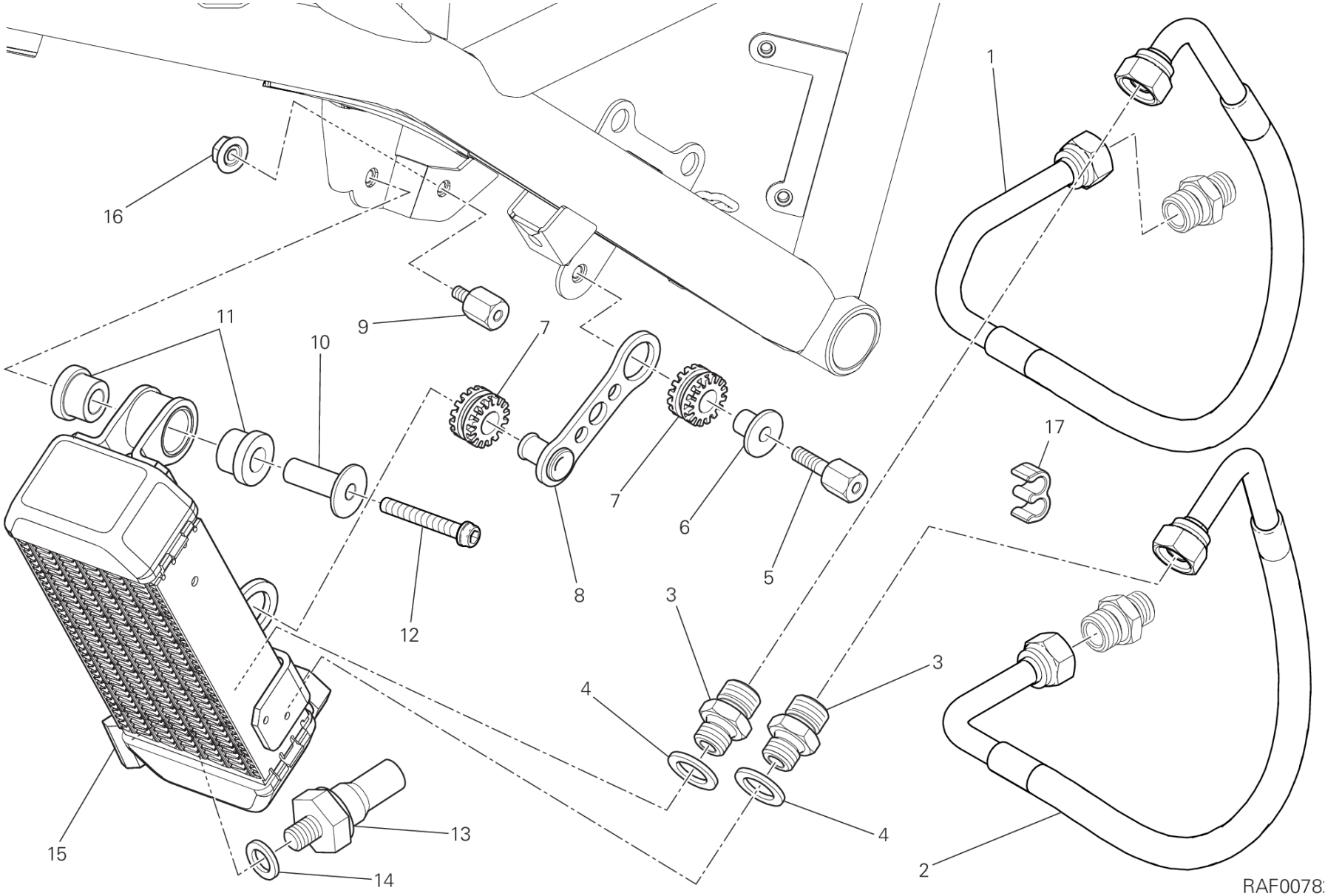
1
2
3
3
4
4
5
6
7
7
8
9
10
11
12
13
14
15
16
17
RAF0078

DRAWING 34A - OIL COOLER

GROUP FRAME

POS.	CODE	DESCRIPTION	QTY	VALIDITY	NOTES
1	54911151B	OIL DELIVERY PIPE	1		
2	54911161B	PIPE	1		
3	81510221A	NIPPLE, HOSEM14X1.5	2		
4	78710111A	GASKET, ALUMINIUM 14X22X2	2		
5	77919591AA	SCREW, SPECIAL	1		
6	71610031A	SPACER	1		
7	76410241A	VIBRATION DAMPER PAD	2		
8	83014041B	BRACE, RADIATOR	1		
9	77919601AA	SCREW, SPECIAL	1		
10	71614941BA	SPACER	1		
11	76412141A	VIBRATION DAMPER PAD	2		
12	77156738B	SCREW TCEIF M6X40	1		
13	53940302A	SWITCH ASSY, OIL PRESSURE	1		
14	85211951A	GASKET 10.5X17X2	1		
15	54841061C	OIL COOLER	1		
16	74841091AA	NUT	1		
17	75811421A	HOSE GUIDE	1		

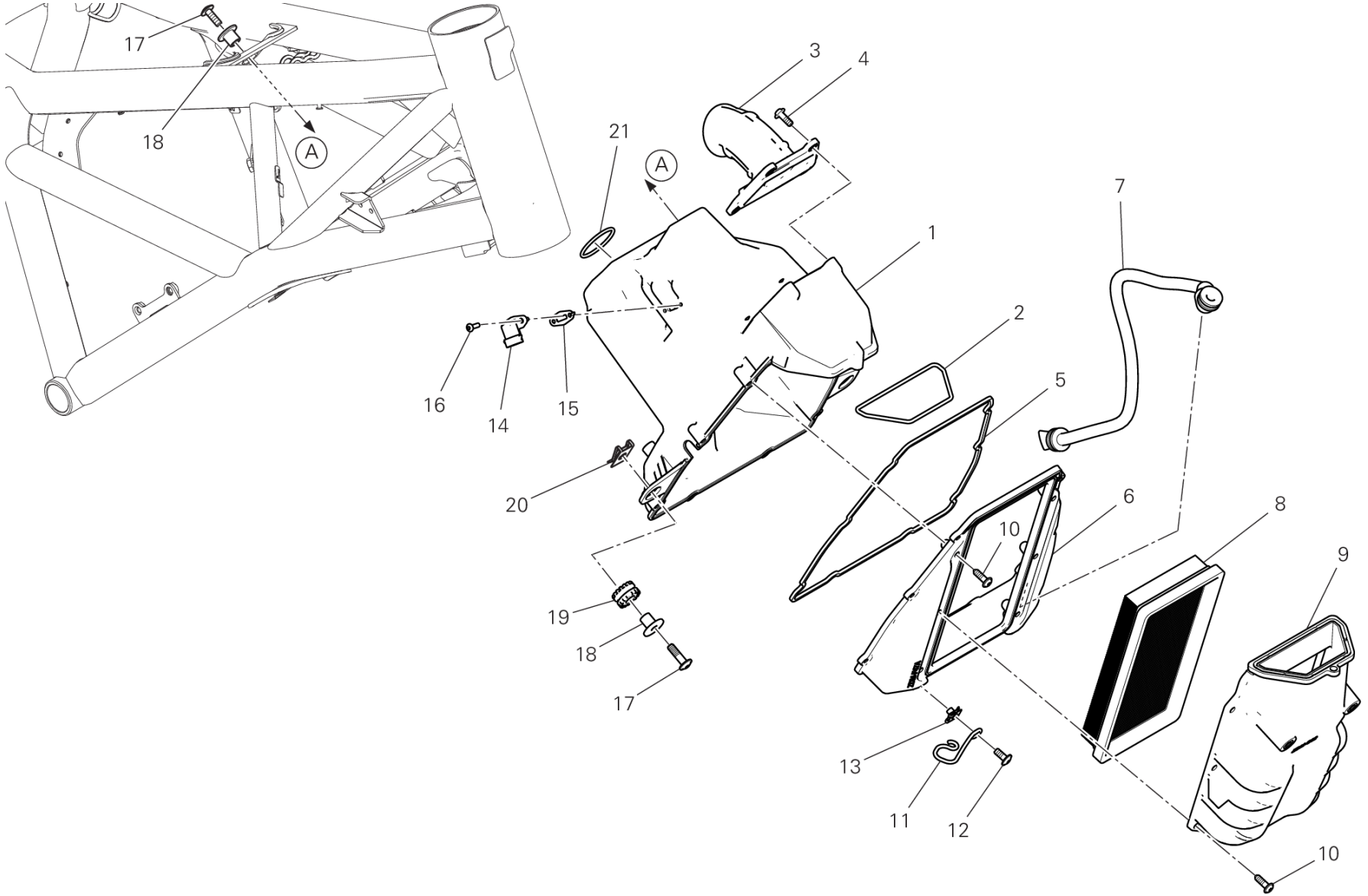

RAF00779

DRAWING 35A - AIR INTAKE - OIL BREATHER

GROUP FRAME

POS.	CODE	DESCRIPTION	QTY	VALIDITY	NOTES
1	4421A021A	LOWER HALF-CASE	1		
2	78812061A	GASKET	1		
3	48413091A		1		
4	77244183B	SCREW TBEI M5X14	4		
5	78812051A	GASKET	1		
6	4421A031A	UPPER HALF-CASE	1		
7	93520011A	HOSE, DRAIN AIRBOX	1		
8	42610751A	FILTER, AIR	1		
9	24717521A	FILTER COVER UNIT	1		
10	77440203C	SCREW	15		
11	75812181A	HOSE GUIDE	1		
12	77244173B	SCREW TBEI M5X12	1		
13	85040471A	QUICK FASTENING M5	1		
14	55240121A	SENSOR, AIR TEMPERATURE	2		
15	78811041A	GASKET, COOLING WATER SENSOR	2		
16	77440111A	SCREW	3		
17	77240453C	SCREW TBEIF M6X22 10.9	1		
18	71610061A	SPACER	3		
19	76410241A	VIBRATION DAMPER PAD	2		
20	85040381A	QUICK FASTENING	2		
21	88640771A	O-RING	1		

RAF00778

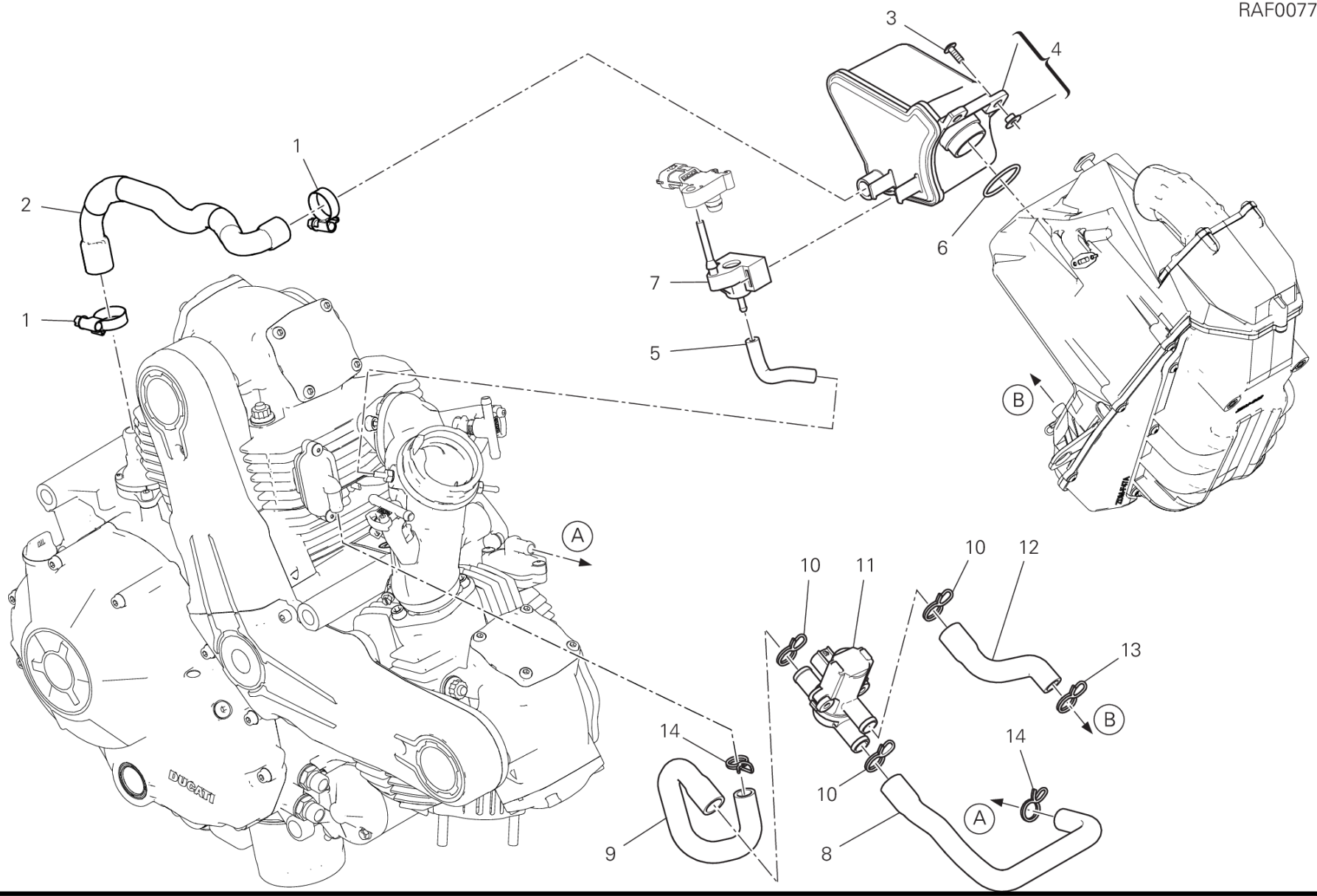

DRAWING 35B - SECONDARY AIR SYSTEM

GROUP FRAME

POS.	CODE	DESCRIPTION	QTY	VALIDITY	NOTES
1	74141811A	CLAMP 16-27 MM	2		
2	87621271B	HOSE, BLOW-BY	1		
3	77244163B	SCREW TBEI M5X10	2		
4	58510912A	VENT TANK	1		
5	59014481A	DEPRESSURE/PRESSURE LINE	1		
6	88640771A	O-RING	1		
7	8291D011A	BRACKET SENSOR PRESSURE	1		
8	87713021B	DUCT, AIR	1		
9	87713031A	DUCT, AIR	1		
10	74142251A	CLAMP	3		
11	59340531A	ACTUATOR	1		
12	87713041A	DUCT, AIR	1		
13	74142211A	CLAMP	1		
14	74142411A	CLAMP	2		

IMP01584

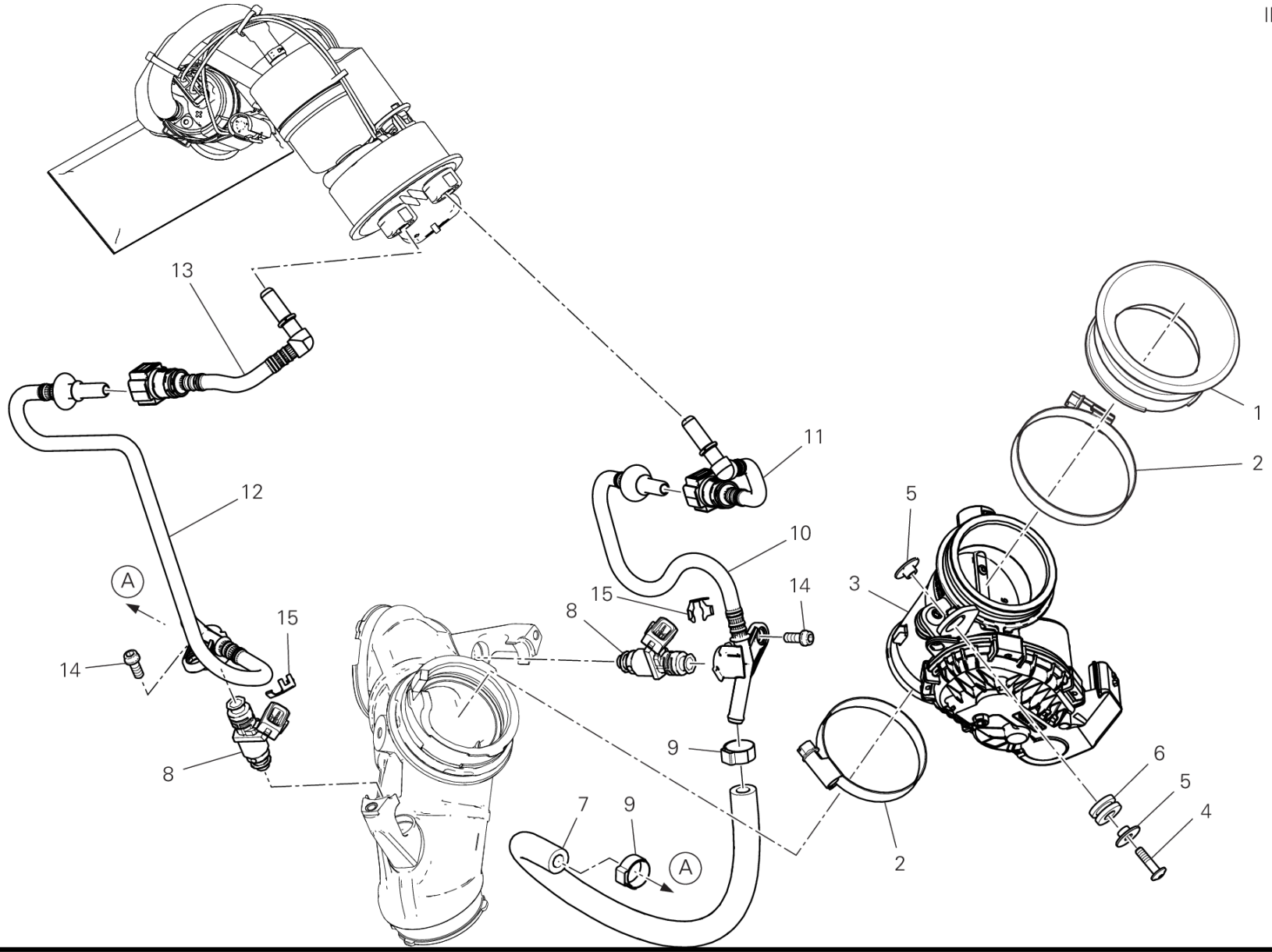

DRAWING 36A - THROTTLE BODY

GROUP FRAME

POS.	CODE	DESCRIPTION	QTY	VALIDITY	NOTES
1	13510411B	AIR FUNNEL	1		
2	74141871A	CLAMP 60-80 MM	2		
3	28241131A	THROTTLE BODY	1		
4	77244213B	SCREW TBEI M5X20	1		
5	71615691AA	SPACER	2		
6	76411141A	VIBRATION DAMPER PAD	1		
7	59019191A	PIPE	2		
8	28043811C	INJECTOR	2		
9	28740241B	CLAMP CLICK 16.8MM	2		
10	59028811A	PIPE	1		
11	59028801A	PIPE	1		
12	59028791A	PIPE	1		
13	59028781A	PIPE	1		
14	77156398B	SCREW TCEIF M5X12	2		
15	85042371A	CLIP	2		

IMP01585

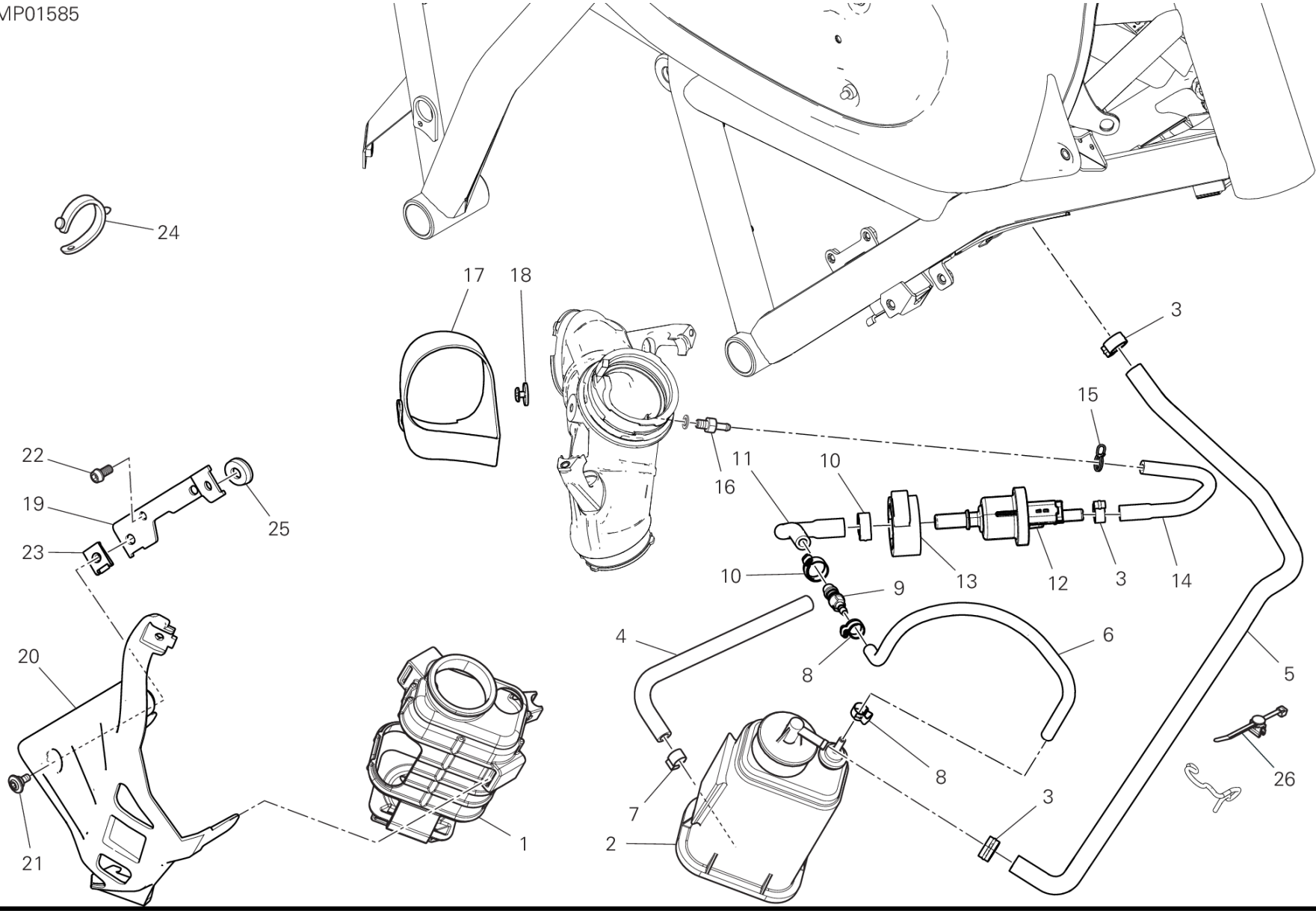

DRAWING 36B - CANISTER FILTER

GROUP FRAME

POS.	CODE	DESCRIPTION	QTY	VALIDITY	NOTES
1	86612311A	MOUNT RUBBER	1		
2	42610741A	CANISTER FILTER	1		
3	74140631A	CLAMP	3		
4	59014741A	HOSE, DRAIN	1		
5	93512601A	PIPE	1		
6	93512041A	PIPE	1		
7	74140581A	CLAMP	1		
8	74141001A	CLAMP 8.5/7	2		
9	81441021A	UNION	1		
10	74140641A	CLAMP	2		
11	93512671A	PIPE	1		
12	65540132A	VALVE, BREATHER	1		
13	86613671A		1		
14	935Z0581A	PIPE	1		
15	74140911A	CLAMP	1		
16	81411111C	NIPPLE, HOSE	1		
17	75910341A	RUBBER BAND	1		
18	75910351A	BRACKET	1		
19	8291F991AA	BRACKET	1		
20	4601M891B	COVER , FRAME RH	1		
21	77214411BA	SCREW, SPECIAL	2		
22	77113691A	SCREW TCEIF M6X12	2		
23	85044691A	QUICK FASTENING	2		
24	74110551A	CLAMP, RUBBER 39MM	1		
25	7131F431AA	SPACER	1		
26	75840771A	FAIRLEAD	1		

VST02634

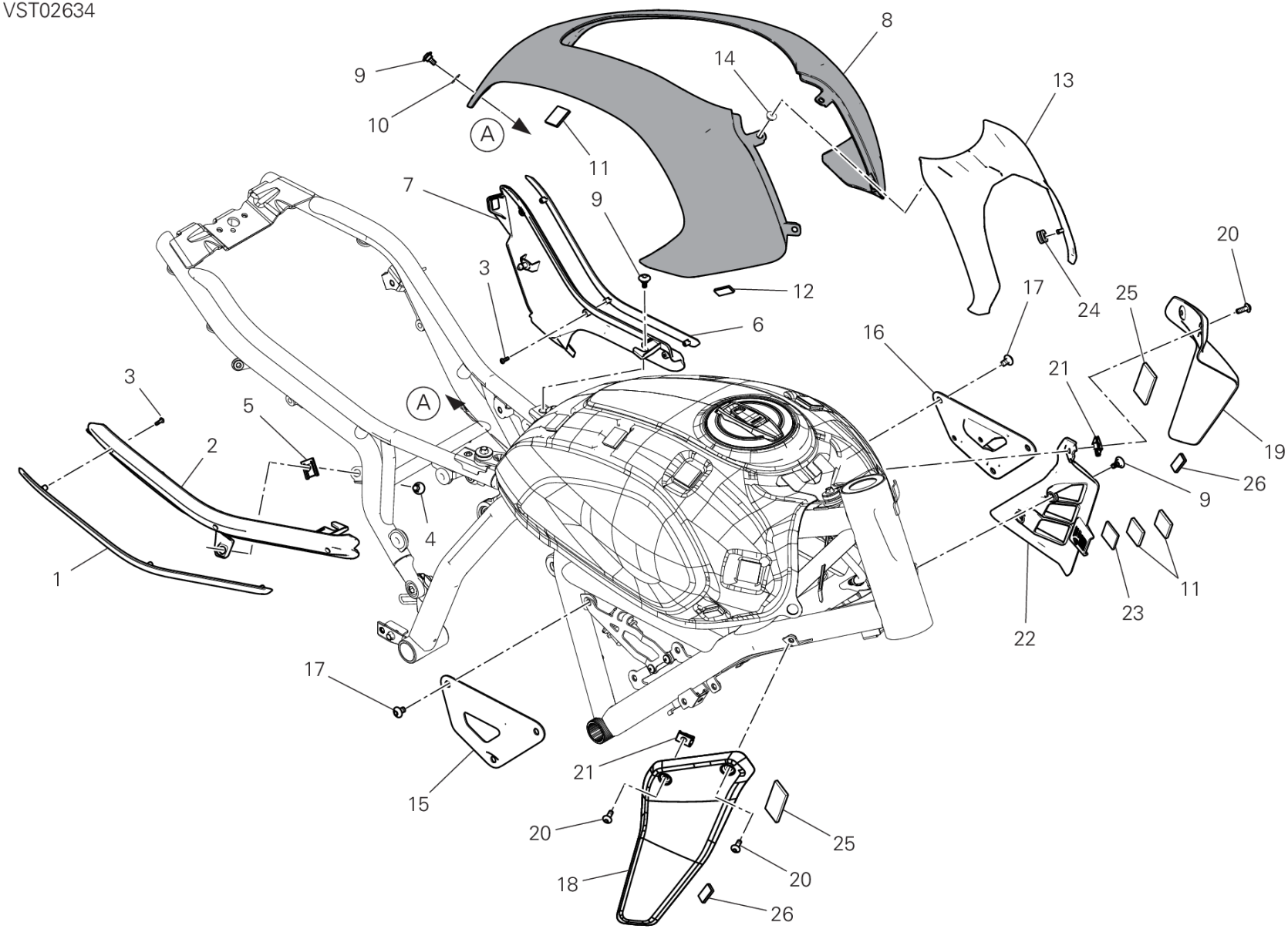
8
9
10
14
13
A
11
7
9
3
12
24
17
25
20
6
16
3
21
5
A
19
2
26
9
4
1
11
23
22
17
21
15
20
25
18
20
26

POS.	CODE	DESCRIPTION	QTY	VALIDITY	NOTES
1	4601N201AA		1		
2	4601M941A		1		
3	77440213C	SCREW	6		
4	77214411BA	SCREW, SPECIAL	2		
5	85040381A	QUICK FASTENING	2		
6	4601N191AA		1		
7	4601M961A		4		
8	4601M931BE	TANK COVER	1		
9	77214231A	SCREW	6		
10	85212181A	WASHER, NYLON 9X14X1	1		
11	85042242A	DUAL LOCK	12		
12	85042481A	DUAL LOCK	2		
13	4601R221A		1		
14	76417651A	RUBBER PAD	4		
15	4601M901BA		1		
16	4601N011BA		1		
17	77244303B	SCREW M6X10	6		
18	4601N031AB		1		
19	4601N041AB		1		
20	77244183B	SCREW TBEI M5X14	4		
21	85044691A	QUICK FASTENING	2		
22	4601N021B	RADIATOR COVER	1		
23	86613281A	ADHESIVE PAD	2		
24	76410901A	RUBBER PAD	1		
25	86613241A	PAD	2		
26	78812011A	RUBBER PAD	2		

VST02646

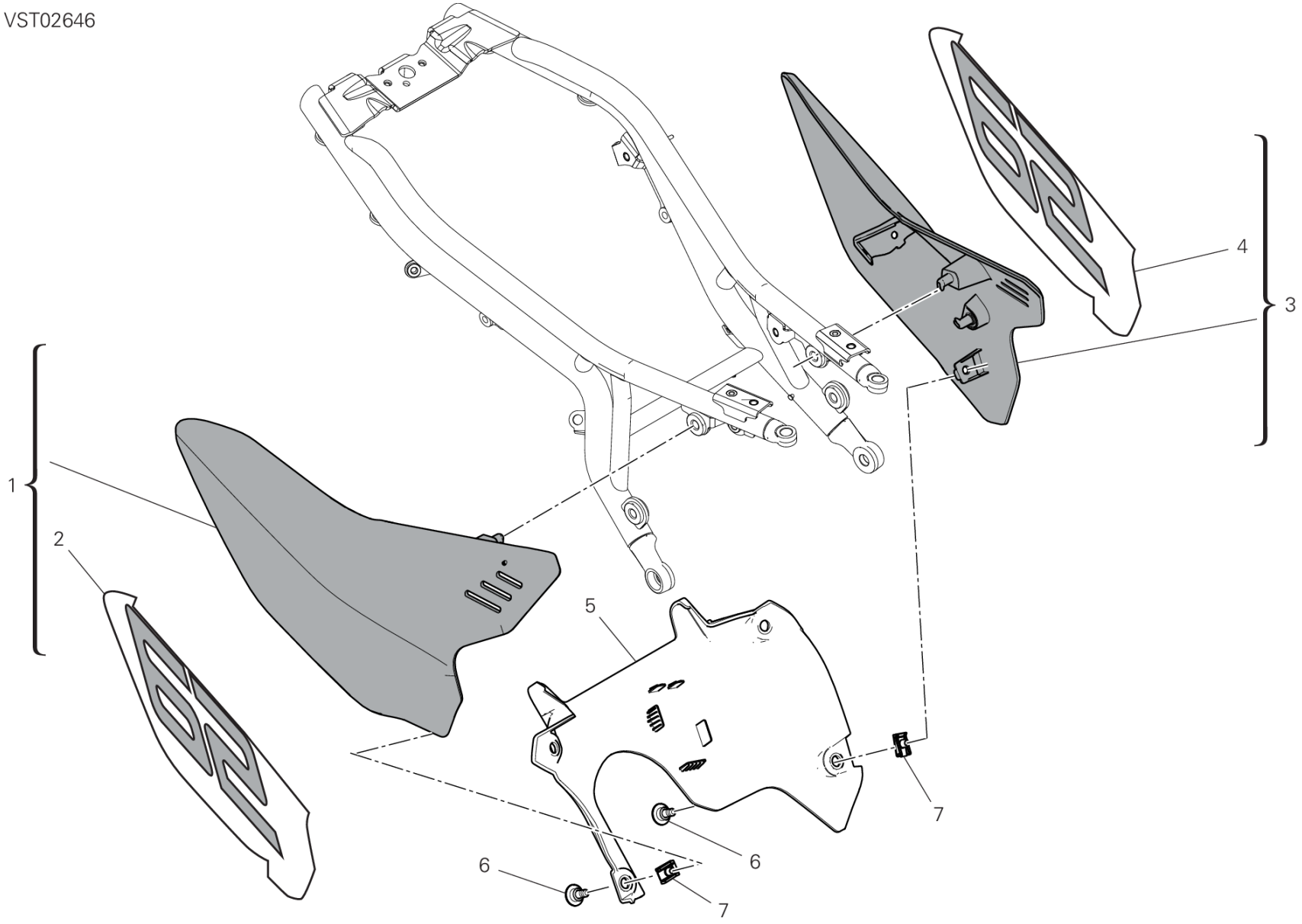

DRAWING 37B - FAIRING

GROUP FRAME

POS.	CODE	DESCRIPTION	QTY	VALIDITY	NOTES
1	48217201BB	R.H. NUMBER SUPPORT	1		
2	4381H271A	TRANSFER	1		
3	48217211AB	L.H. NUMBER SUPPORT	1		
4	4381H261A	TRANSFER	1		
5	4601P101B	COVER	1		
6	77214411BA	SCREW, SPECIAL	4		
7	85044691A	QUICK FASTENING	4		

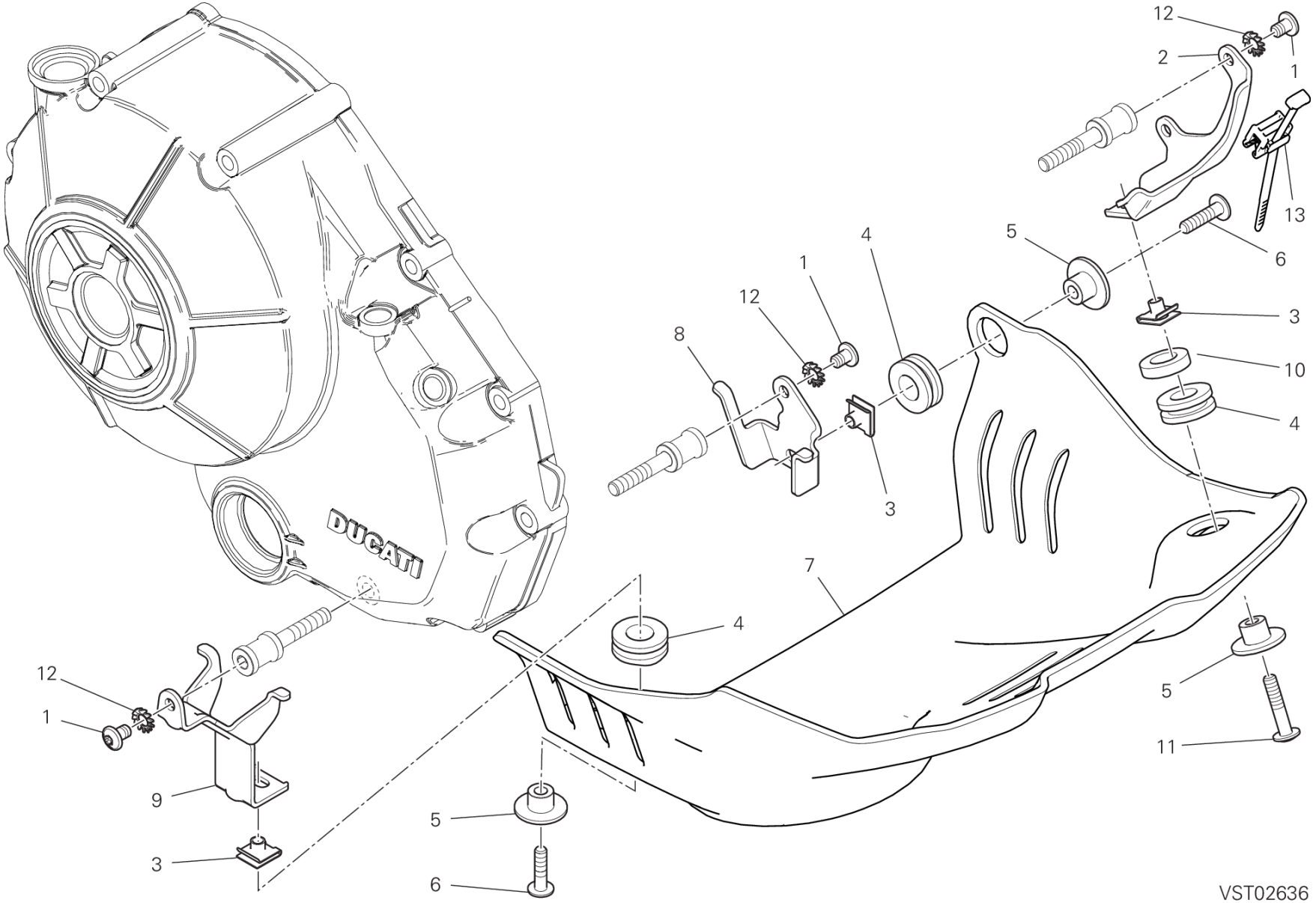
12
2
1
13
5
6
4
1
12
8
3
10
4
3
7
4
12
1
9
3
5
6
5
11
VST02636

DRAWING 37C - GUARD, ENGINE

GROUP FRAME

POS.	CODE	DESCRIPTION	QTY	VALIDITY	NOTES
1	77244183B	SCREW TBEI M5X14	3		
2	8301J131AA	PLATE	1		
3	85040471A	QUICK FASTENING M5	3		
4	76411381A	VIBRATION DAMPER PAD	3		
5	71611551A	SPACER 6.5X11X17	3		
6	77244203B	SCREW	2		
7	4601N981AA	GUARD, ENGINE	1		
8	8301J141BA	BRACKET	1		
9	8301J191AA	BRACKET	1		
10	71314111A	SPACER 5.2X16X5	1		
11	77240323C	SCREW	1		
12	85540051A	TOOTHED LOCK WASHER	4		
13	75840801A	CLAMP	1		

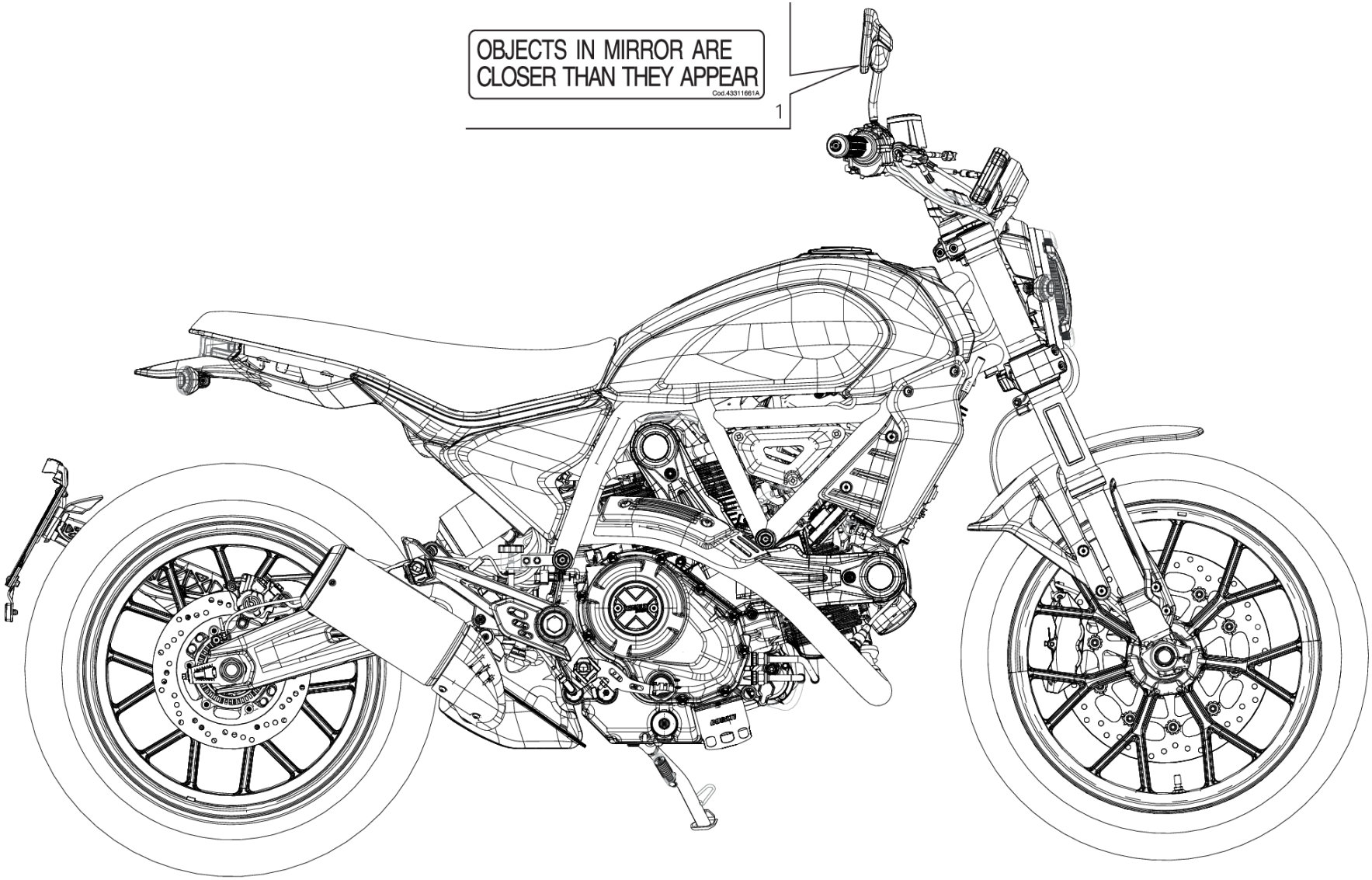
OBJECTS IN MIRROR ARE
CLOSER THAN THEY APPEAR
Cod.43311661A
1

VST02739

POS.	CODE	DESCRIPTION	QTY	VALIDITY	NOTES
1	43311661A	LABEL WARNING MIRROR	2		

CODE	NO. TABLE	POS.
036749275	09A	11
040009050	02A	21
040029126	02A	17
061950065	10A	2
064770010	11C	7
064770010	11D	7
066549680	04A	3
067049310	09A	13
069191030	13B	5
075949280	09B	10
11210801AA	05A	8
11210801AB	05A	8
11711523AA	26B	27
11723691A	03B	16
12022912AB	06A	7
12022922AB	06A	1
12111741A	06A	5
12113031A	06A	3
12120531B	06A	4
12221612C	06A	2
13510411B	36A	1
14010791B	11E	1
14621923AR	05A	1
147Z0011A	07A	9
14814911A	11B	12
14814921A	11A	12
14911061C	03A	3
14911071A	03A	2
15021771B	03A	17
15021781C	03A	16
15620822AC	05A	5
15620823AA	05A	5
15620823AB	05A	5
16011051A	11A	6
16011051A	11B	6
16014781A	11A	20
16014781A	11B	20
16014853A	30B	2
16022491A	29A	19
16024381A	30B	4
160Z0041A	10A	13
16311231A	11A	21
16311231A	11B	21
17011751A	03B	17
17121081A	07A	10
17212581A	03A	10
17213371B	03A	8
17213381B	03A	5
17213391B	03A	9
17214471A	03A	21
17214481A	03A	18
17214491A	03A	20
17214501A	03A	14
17214511A	03A	13
17214521A	03A	12
17310291A	10A	14
17420434A	08A	1
176Z0021A	10A	10
18020511A	02A	6
180Z0011A	02A	11
180Z0021A	02A	12
18210781A	02A	8
18220772A	02A	9
18410051A	26B	30
18710021A	20B	2
18710021A	22B	2
19020591A	03B	9
19410751A	03B	4
19510411D	22B	1
19540081B	22B	3
19611011A	03B	12
19611021A	03B	11
19820661A	03B	14
208Z0011A	11C	4
208Z0011A	11D	4
209Z0011A	11C	9
209Z0011A	11D	9
21010881A	11C	15
21010881A	11D	15
21110881A	11C	16
21110881A	11D	16
225P0252A	09A	1
23520422A4	11A	14
23520422A4	11B	14
24020393A	11C	22
24020393A	11D	22
24221611AY	04B	1
24311701AY	04A	1
24511881B	11B	8
24511891A	11A	8
24521931C	07A	4
24521941B	07A	1
24714081A	11A	27
24714081A	11B	27
24715041A	22A	7
24715051A	22A	6
24717501A	04A	15
24717501A	04B	8
24717521A	35A	9
25440014A	04A	2
25510233A	07A	15
25510243A	11A	5
25510243A	11B	5
26420471A	10A	12
27040221A	10A	1
276Z0061A	10A	16
28043811C	36A	8
28241131A	36A	3
28643791A	13C	5
28643791C	13C	5
28740241B	36A	9
30124411AB	11D	12
30124421AB	11C	12
30310681AA	11C	13
30310681AA	11D	13
30310681AB	11C	13
30310681AB	11D	13
30310681AC	11C	13
30310681AC	11D	13
30410901A	11C	14
30410901A	11D	14
30410901AB	11C	14
30410901AB	11D	14
30410901AC	11C	14
30410901AC	11D	14
30410911A	11C	20
30410911A	11D	20
30410911AB	11C	20
30410911AB	11D	20
30410911AC	11C	20
30410911AC	11D	20
34111951AA	18A	1
34220891AB	18A	5
34421401A	18B	1
34521401A	18B	2
34913601A	18B	9
34913611A	18B	10
34913621A	18B	3
34913661A	18B	14
34913671A	18B	21
34913991A	18B	11
34914001A	18B	18
34914241A	18B	19
34914321A	18B	15
34914331A	18B	8
34914341A	18B	5
34914351A	18B	6
34914361A	18B	27
34914371A	18B	26
34914381A	18B	17
34914891A	18B	20
34914901A	18B	16
34921871A	18B	12
34921881A	18B	23
34921891A	18B	7
34923301A	18B	13
36016281AA	22A	3
36016341AA	18A	10
36016411AA	18A	6
365P1551B	23A	1
36911571A	19A	6
37015192AA	19A	1
37310631A	19A	9
38040221B	13A	2
38540073B	13D	1
38640561C	13C	9
38940191A	13B	2
38940201A	13B	2
38940211A	13B	2
38940221A	13B	2
38940231A	13C	22
38940351A	13B	13
39740081B	13C	21
40612015A	15A	1
42520061A	30A	7
42520071A	30A	6

ALPHANUMERIC INDEX

CODE	NO. TABLE	POS.
42520081A	30A	8
42610741A	36B	2
42610751A	35A	8
43311661A	38A	1
43314111A	21A	4
43315011A	04A	10
43315161A	29A	1
4381H221AA	28A	11
4381H231AA	29A	22
4381H241A	30A	17
4381H251A	30A	18
4381H261A	37B	4
4381H271A	37B	2
4421A021A	35A	1
4421A031A	35A	6
44440039A	09B	3
44610611A	19A	15
44712671A	19A	13
44910821A	17A	1
45120201A	07A	7
45120211A	06A	6
45520192A	09A	6
45612631AA	26A	26
45721011AB	26B	15
4601C091A	24A	4
4601D781B	21A	19
4601F521A	13B	18
4601G752A	17A	2
4601H701A	20C	16
4601I661A	21A	8
4601M741AB	31B	4
4601M751B	31A	13
4601M761A	31A	12
4601M842A	15A	2
4601M872A	31A	2
4601M881A	31A	3
4601M891B	36B	20
4601M901BA	37A	15
4601M931BE	37A	8
4601M941A	37A	2
4601M961A	37A	7
4601N011BA	37A	16
4601N021B	37A	22
4601N031AB	37A	18
4601N041AB	37A	19
4601N171AD	14A	3
4601N181AD	14A	4
4601N191AA	37A	6
4601N201AA	37A	1
4601N901B	13C	17
4601N981AA	37C	7
4601P061A	13C	16
4601P101B	37B	5
4601R221A	37A	13
46111391AA	31A	11
46111391AB	31A	11
46320222A	09A	34
46320222A	11A	28
46320222A	11B	28
46410451A	26B	12
46410461A	26A	12
46410941BA	26A	10
46410941BA	26B	10
46510601A	26B	7
46510611A	26A	7
47018461AA	33A	3
47028451BA	33A	1
48217201BB	37B	1
48217211AB	37B	3
48413091A	35A	3
48612931A	04A	8
490P0270A	C3	1
490P0303A	A3	7
490P0303A	H	1
490PE270A	A3	3
490PE323A	A3	5
490PE323A	D2	1
490PE333A	A3	1
490PE333A	B3	1
491P0290A	A3	4
491P0290A	C3	2
491P0353A	A3	8
491P0353A	H	2
491PE327A	A3	6
491PE327A	D2	2
491PE336A	A3	2
491PE336A	B3	2
49240032A	29A	13
49241411A	28A	5
49411651AA	29A	5
49720031A	28A	9
49720071AC	29A	9
50122831AA	28A	6
50222511AA	29A	14
50410061A	29A	11
504Z0381AA	28A	4
5101E251B	13B	11
5101M511D	13B	1
5101N031A	13B	17
51311011C	13C	27
51411201A	13C	23
51411211C	13C	24
51610053D	13D	2
51840051B	13E	2
52010611C	14A	1
52310482B	22A	4
52310492B	22A	5
52510431G	21A	18
52510761C	14B	1
52910131B	21A	20
52910221A	18B	4
52910231A	21A	12
53010611B	14A	19
53010611B	14B	16
53910351A	16A	8
53910741A	22B	9
53910751A	20A	2
53920901A	26B	32
53940302A	34A	13
53941102C	20D	15
54040111C	13D	4
54140191A	13B	4
54241101A	20C	12
54841061C	34A	15
54911151B	34A	1
54911161B	34A	2
55214491B	31A	8
55219421B	13D	5
5521B352B	26A	17
55240121A	13D	8
55240121A	35A	14
55241321C	09B	14
55241452A	06A	8
55243161B	13D	9
55243911A	02A	10
55243942B	04B	4
55610663AC	16A	6
55611091AA	16A	1
55620881AA	16A	10
56113211A	21A	11
56116471A	21A	1
56416591AE	24A	1
56416591AF	24A	1
57015351A	31A	10
57115241A	31A	1
57212241B	31B	1
575P0071A	31A	17
57610671A	31B	16
58510912A	35B	4
58540271A	20A	9
58540311A	20D	1
58613181DC	30A	1
59014481A	35B	5
59014741A	36B	4
59019191A	36A	7
59028781A	36A	13
59028791A	36A	12
59028801A	36A	11
59028811A	36A	10
59210261A	30A	5
59310601B	09A	46
59320621B	09A	33
59340531A	35B	11
59517281BB	32A	1
59810201A	13E	6
59820611A	13E	12
59822641C	13E	7
59840291A	13E	4
59840611A	13E	13
61041292C	20B	6
61141701A	20D	10
61240052A	20B	1
61240052A	20D	13
61240052A	22B	4
61240302A	20D	8
61240341A	20D	16

CODE	NO. TABLE	POS.
61240511A	20B	7
61241221A	20D	14
61340761A	20D	11
61341021A	20B	8
61812011C	20C	7
61812021C	20C	11
61912021C	20C	1
61912031C	20C	10
62441501A	20A	1
62540451A	20D	9
62640231A	20A	3
62640291A	22B	6
62640601A	20A	4
62640601A	22B	13
62641301A	22B	14
63041051A	22B	5
63140281A	20D	12
63140591A	20A	5
63210871A	22B	7
65010271C	22A	1
65010431B	22A	1
65110611A	22A	2
65220391B	13E	5
65540132A	36B	12
66020091C	22A	8
66910011E	11C	8
66910011E	11D	8
67040351A	13A	8
67110661C	13A	1
67621301A	29A	2
67641041A	17A	3
67740251A	17A	4
68010131A	05A	10
68010131A	07A	2
68010131A	11A	11
68010131A	11B	11
68540081A	14A	18
69710141A	32A	6
69710151A	32A	7
69710391A	32A	5
69926761A	13C	14
70010491A	26A	22
70010491A	26B	23
70010591A	29A	17
70010691A	21A	17
70011151A	18A	12
70011161A	26A	18
70011161A	26B	19
70140031A	10A	15
70140053A	03A	4
70140211A	03A	1
70140471A	10A	11
70140681A	09A	3
70240381A	29A	21
70240401B	09A	9
70240921A	09A	29
70240932A	09A	25
70241232A	18A	9
70242211A	09A	55
70242261A	09A	17
70250081A	04B	2
70250081A	09A	20
70250412A	09A	56
70250621A	28A	7
70250621A	29A	15
70250861A	03B	10
70310131A	18A	3
70350062A	07A	18
70350062A	11A	2
70350062A	11B	2
71011321A	23A	5
71011901A	14A	12
71110951A	09A	32
71111261A	11A	31
71111261A	11B	31
71111281A	09B	12
71111601A	09B	4
71111721A	06A	9
71115491A	14A	15
71310141E	03A	11
71311841A	29A	10
71311973A	28A	2
71312661A	03A	15
71314111A	37C	10
71314901A	13D	6
71315901A	03B	15
71316171A	22A	9
71319151A	02A	2
71319191A	10A	8
71319201A	13D	6
7131A792A	14A	7
7131A801A	29A	20
7131A811A	29A	7
7131C551A	29A	16
7131E601A	17A	8
7131F431AA	36B	25
71410941A	28A	8
71510081B	23A	4
71610031A	13D	11
71610031A	20C	3
71610031A	34A	6
71610061A	13C	3
71610061A	35A	18
71610732A	07A	13
71610991B	07A	17
71611551A	37C	5
71614141A	31B	14
71614191A	30A	23
71614261A	13C	34
71614261A	21A	13
71614891AA	14B	12
71614941BA	34A	10
71615151AA	15A	5
71615691AA	36A	5
71616151AA	30A	3
71616291AA	31B	10
71950418CF	04B	6
71950538C	02A	7
72010513C	28A	3
72050069E	04B	5
72050159EA	31A	4
720941616	09A	10
735001542	02A	15
735033380	04B	3
735033380	09A	18
73740241B	07A	6
74110121A	13B	14
74110131A	13B	7
74110131A	33A	16
74110551A	13B	15
74110551A	36B	24
74140381A	13B	6
74140381A	20C	13
74140431A	20D	7
74140581A	36B	7
74140631A	36B	3
74140641A	36B	10
74140651A	30A	16
74140911A	36B	15
74141001A	36B	8
74141701A	19A	19
74141801A	11E	2
74141811A	35B	1
74141871A	36A	2
74142211A	35B	13
74142251A	35B	10
74142411A	35B	14
74142831A	33A	17
74142901A	31B	7
74710151A	09A	15
74750031A	26B	13
74750101A	26A	31
74810141C	28A	1
74810232B	29A	3
74810361A	13A	4
74810501A	11A	29
74810501A	11B	29
74840241AB	18A	14
74840241AB	29A	6
74840331A	31A	7
74840341B	19A	17
74841011AA	33A	7
74841091AA	34A	16
74841101AA	14A	28
74850021A	23A	6
74910031AA	16A	5
74940041A	14A	10
74940041A	26A	16
74940321A	31B	11
74941118B	13C	35
74941118B	13D	12
74941118B	31B	18
74941128B	26A	24
74941128B	26B	25
74950011B	21A	9
75010121D	05A	11

ALPHANUMERIC INDEX

CODE	NO. TABLE	POS.
75010781A	03B	7
75011551A	13E	10
75011601A	07A	12
75011611A	05A	13
75040211A	13C	11
75050051A	13C	28
751202567	09A	12
75810901A	21A	6
75810911A	18B	24
75811421A	34A	17
75811582AA	26A	32
75812072A	20C	14
75812141A	13C	33
75812171A	20C	5
75812181A	35A	11
75812301A	14A	21
75840601A	13D	13
75840771A	31A	18
75840771A	36B	26
75840801A	37C	13
75841221A	13B	19
75841221A	20C	15
75910341A	36B	17
75910351A	36B	18
76410011A	31B	9
76410241A	13D	14
76410241A	20C	4
76410241A	31B	15
76410241A	34A	7
76410241A	35A	19
76410641A	14A	25
76410901A	14B	4
76410901A	37A	24
76410971A	14A	27
76411141A	15A	4
76411141A	36A	6
76411361A	13C	4
76411381A	37C	4
76411501A	33A	15
76411741A	32A	3
76412021B	30A	4
76412141A	34A	11
76412281A	33A	12
76414211A	14A	8
76417651A	14A	5
76417651A	37A	14
76417791A	30A	21
76440572A	11C	10
76440572A	11D	10
76510171A	26A	13
76610671C	09B	2
76640172A	11A	10
76640172A	11B	10
77110191A	26A	27
77110391A	17A	5
77110401B	14A	20
77110481A	16A	9
77110491A	07A	3
77110491A	11A	7
77110491A	11B	7
77110518B	08A	4
77113691A	36B	22
77113861A	11A	16
77113861A	11B	16
77140667CF	07A	5
77140677CF	10A	5
77140697CF	10A	7
77150068B	09A	45
77150408B	14A	26
77150408B	30A	10
77150408B	30B	1
77150443B	13D	17
77150443B	15A	3
77150658B	09A	26
77150668BA	11C	3
77150668BA	11D	3
77150670ZF	02A	3
77150693B	22B	17
77150728B	09B	11
77150768B	14A	6
77150808B	09B	8
77151250ZF	02A	1
77151278B	13E	8
77151283B	31B	8
77151298B	08A	2
77151368B	09B	6
77154337C	17A	6
77156398B	36A	14
77156628B	13C	25
77156633B	18A	17
77156643B	14B	17
77156688B	26A	15
77156694B	18B	22
77156698B	31B	13
77156718B	31B	12
77156738B	34A	12
77157238B	11A	19
77157238B	11B	19
77157254B	18A	2
77157278B	18A	18
7715727BF	19A	20
7715727BF	21A	2
7715754BG	33A	4
77159414B	18A	7
77210103A	07A	8
77210423C	13D	7
77210423C	18A	16
77210591A	20D	3
77210631A	26B	31
77210893B	14B	11
77210893B	24A	7
77210893B	26B	22
77210971B	13C	2
77211021A	13D	3
77211021A	31A	16
77211061A	13B	9
77211061A	13C	30
77211221B	14B	8
77211221B	18B	25
77214231A	37A	9
77214411BA	13C	20
77214411BA	19A	11
77214411BA	24A	5
77214411BA	31A	14
77214411BA	36B	21
77214411BA	37A	4
77214411BA	37B	6
77215251A	03B	3
77240133C	19A	16
77240254C	33A	9
77240288C	11A	26
77240288C	11B	26
77240308C	13E	11
77240323C	37C	11
77240398CC	09A	57
77240403CA	14B	15
77240433C	13D	15
77240453C	13D	16
77240453C	14A	24
77240453C	20C	2
77240453C	35A	17
77240463C	21A	14
77240508C	13C	32
77244163B	13A	6
77244163B	31B	5
77244163B	35B	3
77244173B	35A	12
77244183B	35A	4
77244183B	37A	20
77244183B	37C	1
77244203B	37C	6
77244213B	30A	9
77244213B	36A	4
77244303B	37A	17
77244373B	13A	3
77250341B	09A	48
77251023C	30A	2
77253300ZF	10A	3
77310071A	29A	12
77354898B	22B	12
77440041A	14B	2
77440061A	21A	7
77440071A	13C	7
77440101A	14B	9
77440111A	14A	32
77440111A	35A	16
77440203C	35A	10
77440213C	37A	3
77510161A	21A	15
77510171A	14A	13
77510511B	16A	12
77510661B	04B	9
77510661B	11A	17
77510661B	11B	17
77550200CC	04A	9
77550211A	09B	7

CODE	NO. TABLE	POS.
77550213C	19A	10
77750498C	04A	16
77750498C	04B	12
77750508CC	10A	17
77840041A	09A	24
77910262A	09A	52
77910391A	09A	5
77911092A	05A	2
77911331A	11C	18
77911331A	11D	18
77911511AA	26A	19
77911511AA	26B	17
77911622A	09A	37
77911982A	09A	28
77912061AB	26A	21
77912371B	26B	14
77913311D	20B	5
77913662AB	20A	7
77913662AB	20C	8
77913662AB	20D	4
77913662AB	22B	16
77913971A	20B	3
77913971A	22B	10
77914045B	05A	9
77914181AA	26A	20
77914181AA	26B	20
77915041A	23A	7
77915451B	19A	7
77915471A	05A	4
77916041D	04A	13
77916041D	04B	13
77917241AA	16A	7
77918701A	11A	23
77918701A	11B	23
77919591AA	34A	5
77919601AA	34A	9
77919631A	11D	23
77919881A	09A	53
7791A131AA	33A	5
7791A141AA	33A	6
7791A991AA	23A	2
77927172B	09A	44
77941952A	14A	16
77942032A	04A	14
77942032A	04B	10
77950302A	11A	1
77950302A	11B	1
77950621A	09A	21
78010161B	05A	3
78010871A	11C	17
78010871A	11D	17
78011281A	04A	18
78040081A	31B	19
78610851A	06A	11
78611041A	06A	10
78710111A	09A	19
78710111A	34A	4
78810542A	10A	4
78811041A	35A	15
78811111C	11A	13
78811111C	11B	13
78811151A	09A	47
78811641C	22B	8
78812011A	30A	20
78812011A	37A	26
78812051A	35A	5
78812061A	35A	2
79010261A	31A	9
79111131B	30B	3
79111371A	30B	3
79120462B	06A	12
79710881A	03B	1
79910241A	26B	4
79910241B	26A	4
79910491D	09A	8
79912121A	11C	5
79912121A	11D	5
79912961A	02A	20
79914991A	26A	11
79914991A	26B	11
79915021A	11C	11
79915021A	11D	11
79915061A	02A	4
79915571AA	16A	3
79915863A	26B	16
79920771C	09A	38
79920881C	16A	2
79940121A	09A	43
79940201A	14A	17
80810461A	19A	18
81110021A	09A	50
81140012B	11A	25
81140012B	11B	25
81411111C	36B	16
81416361A	30A	15
81416941A	11E	3
81441021A	36B	9
81510221A	09A	35
81510221A	34A	3
81510281A	09A	39
81810162A	03B	5
81910781AA	28A	10
81910791AA	29A	4
82110091B	29A	18
82110681B	26A	9
82110681B	26B	9
82110901B	26A	5
82110901B	26B	5
82113471A	10A	9
82113881A	02A	13
82114731A	02A	5
82120151A	02A	14
821Z0011B	11C	6
821Z0011B	11D	6
82414541AA	26A	1
82414551AA	26B	1
82610261A	02A	16
82711611B	26A	6
82711611B	26B	6
82716031A	09A	49
82716091A	04B	7
82716141A	13E	9
82716351A	11A	22
82716351A	11B	22
82716371AA	16A	4
82718711AA	18A	15
82719301A	21A	5
8271H831B	04A	7
8271H921BB	33A	8
8291D011A	35B	7
8291E041A	14A	11
8291F991AA	36B	19
8291H231AA	13C	12
8291P611B	14A	2
8291P691C	13C	1
8291P971AA	19A	21
8291R171B	14B	6
8291R181A	14B	5
8291R341B	14B	7
83014041B	34A	8
83014941B	16A	11
8301A851AA	26B	21
8301B021AA	24A	2
8301B031AA	24A	3
8301J131AA	37C	2
8301J141BA	37C	8
8301J191AA	37C	9
8301M681AA	13D	18
8301M791AA	13A	5
8301M801A	13C	18
8301M821AA	14A	23
8301N431AA	14B	14
8301N441AA	14B	13
8301N851AA	14A	22
83110151A	09A	40
84010012A	11C	1
84010012A	11D	1
84010022A	11C	1
84010022A	11D	1
84010032A	11C	1
84010032A	11D	1
84010042A	11C	1
84010042A	11D	1
84010052A	11C	1
84010052A	11D	1
84010062A	11C	1
84010062A	11D	1
84010072A	11C	1
84010072A	11D	1
84010082A	11C	1
84010082A	11D	1
84010092A	11C	1
84010092A	11D	1
84010102A	11C	1
84010102A	11D	1
84010112A	11C	1

CODE	NO. TABLE	POS.
84010112A	11D	1
84010122A	11C	1
84010122A	11D	1
84010132A	11C	1
84010132A	11D	1
84010142A	11C	1
84010142A	11D	1
84010152A	11C	1
84010152A	11D	1
84010162A	11C	1
84010162A	11D	1
84010172A	11C	1
84010172A	11D	1
84010182A	11C	1
84010182A	11D	1
84010192A	11C	1
84010192A	11D	1
84010202A	11C	1
84010202A	11D	1
84010212A	11C	1
84010212A	11D	1
84010222A	11C	1
84010222A	11D	1
84010232A	11C	1
84010232A	11D	1
84010242A	11C	1
84010242A	11D	1
84010252A	11C	1
84010252A	11D	1
84010262A	11C	1
84010262A	11D	1
84010272A	11C	1
84010272A	11D	1
84010282A	11C	1
84010282A	11D	1
84010292A	11C	1
84010292A	11D	1
84010302A	11C	1
84010302A	11D	1
84010312A	11C	1
84010312A	11D	1
84010322A	11C	1
84010322A	11D	1
84010332A	11C	1
84010332A	11D	1
84010342A	11C	1
84010342A	11D	1
84010412B	11C	2
84010412B	11D	2
84010422B	11C	2
84010422B	11D	2
84010432B	11C	2
84010432B	11D	2
84010442B	11C	2
84010442B	11D	2
84010452B	11C	2
84010452B	11D	2
84010462B	11C	2
84010462B	11D	2
84010472B	11C	2
84010472B	11D	2
84010482B	11C	2
84010482B	11D	2
84010492B	11C	2
84010492B	11D	2
84010502B	11C	2
84010502B	11D	2
84010512B	11C	2
84010512B	11D	2
84010522B	11C	2
84010522B	11D	2
84010532B	11C	2
84010532B	11D	2
84010542B	11C	2
84010542B	11D	2
84010552B	11C	2
84010552B	11D	2
84010562B	11C	2
84010562B	11D	2
84010572B	11C	2
84010572B	11D	2
84010582B	11C	2
84010582B	11D	2
84010592B	11C	2
84010592B	11D	2
84010602B	11C	2
84010602B	11D	2
84010612B	11C	2
84010612B	11D	2
84010622B	11C	2
84010622B	11D	2
84010632B	11C	2
84010632B	11D	2
84010642B	11C	2
84010642B	11D	2
84010652B	11C	2
84010652B	11D	2
84010662B	11C	2
84010662B	11D	2
84010672B	11C	2
84010672B	11D	2
84010682B	11C	2
84010682B	11D	2
84010692B	11C	2
84010692B	11D	2
84010702B	11C	2
84010702B	11D	2
84010712B	11C	2
84010712B	11D	2
84010722A	11C	1
84010722A	11D	1
84010722B	11C	2
84010722B	11D	2
84010732A	11C	1
84010732A	11D	1
84010732B	11C	2
84010732B	11D	2
84010742B	11C	2
84010742B	11D	2
84010752B	11C	2
84010752B	11D	2
84010762B	11C	2
84010762B	11D	2
84010772B	11C	2
84010772B	11D	2
84010782B	11C	2
84010782B	11D	2
84010792B	11C	2
84010792B	11D	2
84010802B	11C	2
84010802B	11D	2
84010812B	11C	2
84010812B	11D	2
84010822B	11C	2
84010822B	11D	2
84010832B	11C	2
84010832B	11D	2
84010842B	11C	2
84010842B	11D	2
84010852B	11C	2
84010852B	11D	2
84010862B	11C	2
84010862B	11D	2
84010872B	11C	2
84010872B	11D	2
84011082A	11C	1
84011082A	11D	1
84011092A	11C	1
84011092A	11D	1
84011102A	11C	1
84011102A	11D	1
84011112A	11C	1
84011112A	11D	1
84011122A	11C	1
84011122A	11D	1
84011132A	11C	1
84011132A	11D	1
84011142A	11C	1
84011142A	11D	1
84740021A	26A	3
84740021A	26B	3
84740061A	09A	42
84840111A	33A	2
84850021A	26A	30
85010151A	26B	28
85040381A	14A	30
85040381A	14B	10
85040381A	31A	6
85040381A	35A	20
85040381A	37A	5
85040471A	35A	13
85040471A	37C	3
85040671A	13B	8
85042242A	30A	11
85042242A	37A	11
85042371A	36A	15

CODE	NO. TABLE	POS.
85042481A	37A	12
85044691A	13A	7
85044691A	31A	15
85044691A	31B	6
85044691A	36B	23
85044691A	37A	21
85044691A	37B	7
85044791A	30A	12
85110131A	07A	11
85110191A	05A	12
85110201B	03B	8
85210011B	19A	3
85210021B	19A	3
85210031B	19A	3
85210491B	18A	13
85210532A	09A	7
85210541B	14B	18
85210541B	23A	3
85210651B	26A	23
85210651B	26B	24
85211031AB	18A	8
85211201A	09A	27
85211351A	04A	5
85211571A	26A	29
85211571A	26B	18
85211731A	11A	3
85211731A	11B	3
85211761A	31B	17
85211951A	09A	31
85211951A	34A	14
85212181A	24A	6
85212181A	37A	10
85212461A	11A	15
85212461A	11B	15
85212511A	19A	22
85212511A	21A	10
85212641A	14A	31
85212641A	14B	19
85212691A	05A	7
85212801A	17A	7
85212881A	05A	6
85212881B	05A	6
85212881C	05A	6
85212881D	05A	6
85212881E	05A	6
85212881F	05A	6
85212881G	05A	6
85212881H	05A	6
85212881I	05A	6
85212881J	05A	6
85212881K	05A	6
85212881L	05A	6
85212881M	05A	6
85212881N	05A	6
85212971A	11A	18
85212971A	11B	18
85212971A	11E	4
85213081A	13D	10
85213861AA	26A	8
85213861AA	26B	8
85213871AA	26A	25
85213871AA	26B	26
85214082A	09A	58
85214341A	19A	3
85240131A	31A	5
85240171A	13C	8
85241701A	30A	22
85241711A	14B	3
85241851A	31B	20
85250051A	09B	5
85250091A	14A	9
85250231A	11C	19
85250231A	11D	19
85250241A	20A	8
85250241A	20B	4
85250241A	20C	9
85250241A	20D	5
85250241A	22B	11
85250261A	09A	51
85250401A	18A	11
85250421A	09A	30
85250631A	04A	17
85310021A	08A	3
85310031A	09B	13
85310041A	08A	5
85340021A	14A	14
85350061A	21A	3
85350091A	13C	29
85350101A	13C	26
85540051A	37C	12
85550001B	13B	10
85550001B	13C	31
85550021A	21A	16
85610623A	07A	16
85610642A	11A	30
85610642A	11B	30
85610642A	31B	2
85610743A	11A	4
85610743A	11B	4
85611231A	03A	19
85611261A	03A	6
85611391B	03B	2
85611481A	09A	14
85611911A	03B	13
85640141A	09A	41
86610191A	32A	2
86610301A	32A	4
86610301B	13C	19
86611121A	20C	6
86611861A	13C	13
86612091A	13B	12
86612101A	33A	18
86612311A	36B	1
86612921A	33A	10
86612931A	33A	11
86613241A	37A	25
86613281A	30A	19
86613281A	37A	23
86613671A	36B	13
86613691A	13C	6
86613701B	13B	16
86613711A	14A	29
86613721A	19A	5
86613791A	13C	15
86614011A	30A	24
86614021A	30A	25
86640111A	13E	3
87210691A	22A	10
87210971A	19A	14
87211081A	13C	10
87211681A	13B	3
87211851A	33A	13
87211861A	19A	4
87211871A	19A	12
87241331A	33A	14
87310371A	09B	16
87621271B	35B	2
87713021B	35B	8
87713031A	35B	9
87713041A	35B	12
88110101C	10A	6
88110121A	02A	18
88210031A	07A	14
88210141A	03A	7
88440061A	29A	8
88440071A	19A	2
88440531A	09A	4
88450031A	26A	2
88450031A	26B	2
88450131A	04A	6
88450341B	02A	19
88450341B	19A	8
88610951A	04B	14
88640331A	09A	23
88640371A	09B	1
88640771A	35A	21
88640771A	35B	6
88640891A	04A	12
88640991A	11A	24
88640991A	11B	24
88641321A	09B	9
88641381A	11C	21
88641381A	11D	21
88641731A	03B	6
88641961A	09A	54
88641991A	09B	15
88642431A	26A	28
88642431A	26B	29
88643251A	17A	9
887130137	01B	11
887130958	01C	4
887131010	01C	7
887131058	01C	5
887131062	01C	1
887131072	01C	6
887131749	01B	18

ALPHANUMERIC INDEX

CODE	NO. TABLE	POS.
887131805	01B	8
887131832	01B	9
887131886	01B	20
887131994	01B	4
887132011	01B	17
887132103	01B	3
887132282	01B	7
887132442	01B	10
887132556	01B	15
887132562	01C	3
887132591	01B	14
887132676	01B	2
887132695	01B	6
887132801	01B	26
887132834	01B	19
887132906	01B	16
887132916	01B	24
887133218	01B	1
887133334	01B	21
887133367	01B	23
887134411	01B	5
887134882	01B	12
887138835	01C	2
887138871	01C	8
887138875	01B	27
887651000	01B	25
887651005	01B	25
887651006	01B	25
887651298	01B	22
887651581	01B	13
89320062A	09A	36
89320121A	04A	11
89340241A	20D	2
89340341A	22B	15
89340351A	20A	6
89420091A	09B	18
89520481C	13E	1
91376821AR	32A	8
91376821BG	32A	8
91376821CA	32A	8
91376821CS	32A	8
91376821DA	32A	8
91376821DE	32A	8
91376821EL	32A	8
91376821EN	32A	8
91376821ES	32A	8
91376821FI	32A	8
91376821FR	32A	8
91376821HR	32A	8
91376821HU	32A	8
91376821IT	32A	8
91376821JA	32A	8
91376821KO	32A	8
91376821MX	32A	8
91376821NL	32A	8
91376821NO	32A	8
91376821PL	32A	8
91376821PT	32A	8
91376821RO	32A	8
91376821RU	32A	8
91376821SK	32A	8
91376821SL	32A	8
91376821SV	32A	8
91376821US	32A	8
91376821ZH	32A	8
92610051A	33A	19
92611021A	26A	33
93010041B	18A	4
93040211A	04A	4
93040932A	09A	22
93041271A	09A	2
93041621B	11A	9
93041621B	11B	9
93041631B	09A	16
93041651A	09B	17
93042691A	04B	11
93042762A	09A	59
93310651A	20D	6
93510491A	30A	13
93510501A	30A	14
93512041A	36B	6
93512601A	36B	5
93512671A	36B	11
93520011A	35A	7
935Z0581A	36B	14
944650035	L	1
944650037	L	2
96222221AA	26A	14
96424571AA	31B	3
979000253	01A	2
979000279	01A	1
979000281	01A	6
979000282	01A	3
979000283	01A	4
979000284	01A	5



Ducati Motor Holding S.p.A.
Uffici Commerciali Amministrativi:
Via A. Cavalieri Ducati n. 3
40132 Bologna, Italy
Telefono 051 6413111
Fax 051 406580
Internet www.ducati.com